"Menominee – Where the best of Michigan begins"

MENOMINEE COUNTY BOARD OF COMMISSIONERS

Menominee County Courthouse
839 10th Avenue
Menominee, Michigan 49858-3000

Brian R. Bousley - County Administrator
Sherry Smith - Administrative Assistant
Telephone: (906) 863-7779 or 863-9648
Fax: (906) 863-8839

The Menominee County Board of Commissioners
will meet on Tuesday, November 22, 2011 @ 5:30 p.m. CST
at the Menominee County Courthouse, Courtroom B

AGENDA

A. Call to Order
B. Pledge of Allegiance
C. Roll Call
D. Approval of the Agenda
E. Approval of Previous Minutes
CB – Nov. 8, 2011
F. Public Comment *(Statements, not debate, limited to 5 minutes per person on agenda items only)*
G. Presentations *(limited to twenty minutes)*
H. Department Head/Elected Officials Reports *(limited to ten minutes)*
I. Action Items

1. Moved by _____ seconded by _____ to ratify the reappointment of Charles Kalhoefer as a director on the Bay Area Medical Center Board.

2. Moved by _____ seconded by _____ to approve the proposal from Valley Mechanical, Inc. in the amount of $30,986 for replacement of the Courthouse boiler system tunnel cap, replacement of chilled water piping and the addition of temperature control alarms. (These items are in addition to the amount approved on 8/23/11-$117,420) Funds to be disbursed from account #101-103-998.00 (Designated Building Projects)

3. Moved by _____ seconded by _____ to approve the proposed project diagram from the Menominee Women's Club and allow the club to solicit funding for the Menominee County Bell Shelter (display) project.

4. Moved by _____ seconded by _____ to approve the amended MERS resolution for the Administrator Division to move to a Hybrid plan, to begin on October 1, 2011.

5. Moved by _____ seconded by _____ to approve Resolution 2011-17 ~ Authorizing Employee Benefits Agency, Inc. to administer the HRA plan for Menominee County.

James Furlong - Chairperson *Bernie Lang - Vice Chairperson*

Charlie Meintz *Mark Jasper* *Jim Pearson*

6. Moved by _____seconded by _____ to approve the transfer of $200,000 from account #101-997-999.31 (FY 2010-11) into account #401-000-699.00 for the County portion of the Three Way road Program Funding, to be carried over into FY 2011-12.

7. Moved by _____seconded by _____ to approve the Memorandum of Agreement (MOA) between the Center for Shared Solutions and Technology Partnership and Menominee County. (9-1-1 GIS Grant)

8. Moved by _____seconded by _____ to approve the Enhanced Access to Digital Public Records Policy.

9. Moved by _____seconded by _____ to approve Resolution 2011-18 ~ Support of Guaranteed Revenue Replacement Should the State Repeal Personal Property Taxes.

10. Moved by _____seconded by _____ to approve the 2011 Menominee County Apportionment report as amended due to the Nov. General Election. (Stephenson School Millage increase.)

11. Moved by _____ seconded by _____ to approve Miscellaneous Bills as paid on October 27 & Nov. 2, 2011 in the amount of $162,090.39.

12. Moved by _____seconded by _____ to approve Commissioner Per Diems & Expenses as recently submitted for payment.

13. Moved by _____ seconded by _____ to place miscellaneous boards/committees/commission reports on file in the office of the County Clerk.

J. New Business (discussion only)

1. Personnel Items:
   a.

2. Building and Grounds/Park Items:
   a.

3. Miscellaneous Items:
   a. PA-152 ~ (Formerly Senate Bill 7)
   b. InSequence for GIS, maps-in-deed – Commissioner input on activation

4. Finance Items
   a. Miscellaneous Bills as paid on Nov. 10 & 16, 2011 in the amount of $115,668.34.
   b. Commissioner Per Diems and expenses

K. Moved by _____ to go into closed session, for strategy and negotiations of Courthouse and Correction Officers collective bargaining agreements. (Pursuant to the Open Meetings Act, Act 267 of 1976, 15.268 Section 8 (c)). Motion seconded by _____,

Individuals attending closed session:

_____

L. Moved by _____ seconded by _____ to return to open session at _____pm.

M. Misc. Boards/Committees/Commissions Reports

N. Public Comment *(limited to 5 minutes)*

O. Commissioner Comment

P. Any other items members may wish to present

Q. Adjourn

November 8, 2011

UNAPPROVED

Proceedings of a Regular Meeting of the Board of Commissioners in and for the County of Menominee and the State of Michigan were held at the Menominee County Courthouse, Menominee, Michigan.

Chairman Furlong called the meeting to order at 5:30 P.M. followed by the Pledge of Allegiance.

A call of the roll indicated that the following Commissioners were present/absent:

Present: Coms. Furlong, Jasper, Lang, Meintz, Pearson

Absent:

Chairman Furlong stated the agenda needs to be amended to add the following items: Presentation by Sheriff Ken Marks, New Business Miscellaneous Items E. 911 Mapping Grant, New Business Finance Items D. Resolution regarding Michigan's Personal Property Tax.

Moved by Com. Pearson, seconded by Com. Meintz to approve the agenda as amended. Motion was approved 5-0.

Moved by Com. Jasper, seconded by Com. Pearson to approve the minutes from the October 25, 2011 Regular County Board Meeting. Motion was approved 5-0.

Chairman Furlong called for public comment.

Public Comment:
-Bob Desjarlais – Agenda Item 3, should move closed session to the end of the agenda.

Presentations: Sheriff Ken Marks – Sheriff's office supervisor reorganization.

Department Head/Elected Officials Reports: None.

Moved by Com. Meintz, seconded by Com. Lang to approve Miscellaneous Bills as paid on October 11 & 13, 2011 in the amount of $234,630.11. Motion was approved 5-0.

Moved by Com. Jasper, seconded by Com. Pearson to place miscellaneous boards/committees/commission reports on file in the office of the County Clerk. Motion was approved 5-0

Moved by Com. Pearson, seconded by Com. Jasper to go into closed session, for strategy and negotiations of Courthouse and Correction Officers collective bargaining agreements. (Pursuant to the Open Meetings Act, Act 267 of 1976, 15.268 Section 8 (c)). Individuals attending closed session: All five commissioners, Administrator Brian Bousley, and County Clerk Marc Kleiman. Motion was approved at 6:11 p.m. by a roll call vote 5-0.

Moved by Com. Meintz, seconded by Com. Pearson to return to open session at 6:38 p.m. Motion was approved by roll call vote 5-0.

New Business (discussion only)

Personnel Items:

a. Emergency Management Coordinator – Com. Lang is not sure if the Sheriff still wants to include this position in the Sheriff's Department. Com. Pearson stated that the Sheriff never formally brought his proposition to the public during a meeting. Com. Furlong stated that we need to put the job posting out to the public. Com. Meintz stated that it should have been posted already since it had been voted on at the last meeting. Com. Jasper would like it posted, and feels that we need to keep it as a full-time position.

Building and Grounds/Parks Items:

a. Courthouse Boiler Replacement – Valley Mechanical – Brian explained that Valley Mechanical has given him a proposal to replace several items that they noticed needed replacement while they were working on the boiler project. Those items are the tunnel caps, chiller pipes, and hooking the boilers up with the control and monitoring system in the jail. Dave from Valley Mechanical explained the reasons these items needed to be done. The tunnel caps are beyond repair and he would not feel safe reusing them. The chiller pipes are not in good shape and would be cheaper to replace now rather than wait. And, the control and monitoring system would make the system run more efficiently. Com. Meintz is ok with replacing the tunnel caps and chiller pipes. Al Thompson commented that the controls would help him do his job better and there would be no annual contract with this as there was with Honeywell. Com. Jasper asked if we waited to make these replacements would it cost more later? Dave stated that there would be some increase in cost. Com. Meintz wanted to know if adding the control system would save us money in the long run. Dave said he couldn't put a figure on it, but believes it would. The consensus of the board is to move this item forward to the next meeting.
b. Courthouse Bell Display – Pat Krah from the Menominee Woman's Club and Arts Council gave a presentation on how they would like to display the bell. It would be displayed in a gazebo on the west lawn. This would cost approximately $20,000 and the county would not have to pay. Mrs. Krah explained the group would raise the money for the project by selling memorial bricks. They are now looking for permission and support to proceed with this project. Com. Lang stated that he is personally thrilled with this idea. Al Thompson explained he also has a proposal for the bell to be displayed on top of the well house. The approximate cost of his project would be $4,000 and that cost would be incurred by the county. Com. Furlong is concerned about and damage to the bell itself from vandalism. Com. Jasper asked if they could put acrylic glass around the bell with the proposal Pat Krah has presented. Com. Meintz asked would pay the cost for lighting and maintenance? Com. Pearson feels this is a wonderful addition. The consensus of the board is to move this item forward to the next meeting.

Miscellaneous Items:

a. Bay Area Medical Center – Ratification of appointment. - The consensus of the board is to move this item forward to the next meeting.
b. MERS Resolution-Amendment-Hybrid plan for new hires in the Administrator Division. – Brian stated this would be retro to October 1, 2011 and not to his date of hire. The consensus of the board is to move this item forward to the next meeting.
c. HRA-Resolution for administering the HRA Plan. – Com. Lang stated that we are just replacing the current plan administrator. Brian explained that there are two different ways to administer the plan. $5/person for the traditional method, and $16/person for the seamless method. Com. Pearson asked what portion of the deductible will be covered by Menominee County. Vince Babcock explained $4,000 per person, and $8,000 for family. This will save Menominee County $400,000. The consensus of the board is to move this item forward to the next meeting with the seamless method of administering the plan.

d. PA – 152 – (Formerly Senate Bill 7). – Vince Babcock explained the difference between the hard caps, the 80/20 plan and opting out. Vince explained that there are no penalties for opting out. The board will need to decide by January 1st which plan they intend on adopting. They will then need to make the decision each year by October 1st. Com. Furlong stated that they county has been planning for the 80/20. Com. Pearson agreed with Com. Furlong. Com. Lang would like to know if there is a bottom line on what it could cost the county and the employees with each plan, and he is considering opting out. The consensus of the board is to move this item forward to the next meeting with an option for 80/20 and an option for opting out.

e. 911 Mapping Grant – Brian explained the program. We would need to apply by December 1, 2011 for any grants and we would have to submit a letter of intent by November 18th. There would be no cost for us to submit a letter of intent. The consensus of the board is to have Brian submit a letter of intent, and to have more information for the next meeting.

Finance Items:

a. Three Way Road Program, County Funds. – The board approved creating a carryover account at the June 28, 2011 meeting but never approved putting money in it. The board will need to approve playing the appropriate funds into this account. The consensus of the board is to move this item forward to the next meeting.

b. Miscellaneous Bill as paid on October 27 & November 2, 2011 in the amount of $162,090.39. - The consensus of the board is to move this item forward to the next meeting.

c. Commissioner Per Diems and expenses. - The consensus of the board is to move this item forward to the next meeting.

d. Michigan Personal Property Tax Resolution. – Com. Lang explained that the State of Michigan is considering eliminating this tax. He explained Menominee County receives about 8.5% of the taxable value from Personal Property Tax in the amount of $497,498. He also stated MAC would like the county to pass this resolution. Com. Pearson explained that this is a tax on business not residential, and by eliminating this tax the State is attempting to get new business to come to Michigan. Com. Meintz is 100% in favor of eliminating the tax and thinks it will help business thrive in the boarder counties. The consensus of the board is to move this item forward to the next meeting for consideration.

Misc. Boards/Committees/Commissions Reports:

The consensus of the board is to move this item forward to the next meeting.

Public Comment:

-Bob Desjarlais – Would like to change the agenda structure to move closed session to the end of the meeting.

Commissioner Comment:

-Com. Lang – Senate bills that have been proposed to eliminated County Road Commisions.
-Com. Meintz – With deer hunting coming up he would like to wish all hunters good luck.
-Com. Pearson – Asked Brian to ask our legal representative to find out if the open meetings act allows the board to table and item to later in the meeting.

Any other items members may wish to present: None.

Moved by Com. Pearson, seconded by Com. Meintz to adjourn at 8:20 p.m. Motion was approved 5-0.

James Furlong, Chairman

Marc Kleiman, County Clerk

MENOMINEE COUNTY BOARD OF COMMISSIONERS
AGENDA ITEM

SUBJECT:	**Ratification of Charles Kalhoefer as a Director on the Bay Area Medical Center Board**
DEPARTMENT:	**Administration**
ATTACHMENTS:	**Yes**

SUMMARY:

Charles Kalhoefer will complete his third four year term as a Director for the Bay Area Medical Center Board. According to the BAMC Board bylaws a director who has served three consecutive terms may not be eligible for re-election unless a unanimous consent of the remaining directors is granted. The BAMC Board has unanimously consented to waive the one year waiting period and has nominated Mr. Kalhoefer to serve an additional 4 year term commencing on January 31, 2012.

RECOMMENDED MOTION

Consensus of the board is to move forward to the CB for approval.

To ratify the reappointment of Charles Kalhoefer as a director on the Bay Area Medical Center Board.

Submitted by: Brian Bousley **11/17/2011**
Date

WORKSHOP ACTION

	Forwarded to County Board for Approval as Recommended
	Reviewed with no motion to carry forward
	Continue after additional review/research is obtained
	Recommended with the following change(s):

COUNTY BOARD ACTION **DATE:**

	Approved
	Disapproved
	Approved with the following change(s):

BAY AREA
MEDICAL CENTER

October 28, 2011

James Furlong, Chair
Menominee County Board of Commissioners
Menominee County Courthouse
839 10th Avenue
Menominee, MI 49858

Re: Hospital Board Vacancy

Dear Mr. Furlong:

Charles Kalhoefer, a member of the Board of Directors of Bay Area Medical Center since January 2000 (and a reserve member from September 1997 until January 2000), will complete his third 4-year term on the date of BAMC's annual meeting, January 31, 2012.

Section 4.6 of the Board Bylaws states, "After serving for three consecutive terms, a Director will not be eligible for re-election to the Board of Directors until one full year has passed, unless this requirement is waived by the unanimous consent of the remaining members of the Board of Directors."

At its regular meeting on October 28, 2011, the BAMC Board of Directors unanimously voted to waive the one-year waiting period and to nominate and elect Mr. Kalhoefer to an additional 4-year term to begin at BAMC's annual meeting on January 31, 2012.

Mr. Kalhoefer resides in Stephenson, Michigan, and is a retired superintendent of schools. He can be reached at 906-753-6972.

As directed by the Board of Directors, I respectfully submit Charles Kalhoefer's name for ratification as a Director on the Bay Area Medical Center Board.

Sincerely,

Edward A. Harding, FACHE
President and CEO

c: Brian Bousley, Menominee County Administrator
Marc Kleiman, Menominee County Clerk
BAMC Board of Directors

3100 SHORE DRIVE • MARINETTE, WISCONSIN 54143 • 715/735-6621

MENOMINEE COUNTY BOARD OF COMMISSIONERS
AGENDA ITEM

SUBJECT:	**Courthouse Boiler Replacement**
DEPARTMENT:	**Administration**
ATTACHMENTS:	**Yes**

SUMMARY:

Valley Mechanical, Inc. has a proposal regarding the replacement of the tunnel cap (old tunnel cap pieces are in question structurally), the replacement of the chilled water lines (old waterlines are close to deteriorating), and addition of temp controls to be integrated into existing system. Dave Dunn from Valley Mechanical will be present at the meeting to discuss the proposal and to answer any questions

RECOMMENDED MOTION

to approve the proposal from Valley Mechanical, Inc. in the amount of $30,986 for replacement of the Courthouse boiler system tunnel cap, replacement of chilled water piping and the addition of temperature control alarms.

Submitted by: Brian Bousley **11/17/2011**
Date

WORKSHOP ACTION

	Forwarded to County Board for Approval as Recommended
	Reviewed with no motion to carry forward
	Continue after additional review/research is obtained
	Recommended with the following change(s):

COUNTY BOARD ACTION **DATE:**

	Approved
	Disapproved
	Approved with the following change(s):

VALLEY MECHANICAL, INC.

PO BOX 159
W6106 OAK CREST DRIVE
NORWAY, MI 49870

PROPOSAL

Date	Estimate #
10/31/2011	517

Name / Address
Menominee County 839 10th Ave Menominee, MI 49858

Terms	Due Date
Due on receipt	10/31/2011

Item	Description	Cost	Qty	Total
misc.	Replacement tunnel cap 8 in thick cap cap with reinforced steel rod built in ten foot sections with lifting eyes installed in each plank sealed on the ends for waterproofing. Disposal of old cap is included	5,234.00		5,234.00T
misc.	Replacement of the chilled water piping from courthouse to chiller unit. New piping will be insulated with closed cell foam insulation to prohibit decay of piping from exterior due to moisture issues related to condensation in tunnel. (this is why the old piping is close to failure). Includes removal and disposal of old piping	13,896.00		13,896.00T
misc.	Addition of temp controls to be integrated into existing system will include the following ddc controls for three boilers one chiller two primary pumps DDC start stop points Primary pump 1 Primary pump 2 Chiller	14,356.25		14,356.25T

Thank you for your business. Dave Dunn

Subtotal	
Sales Tax (0.0%)	
Total	

Signature _____

Phone #	Fax #
906-563-9129	906-563-8610

VALLEY MECHANICAL, INC.

PO BOX 159
W6106 OAK CREST DRIVE
NORWAY, MI 49870

PROPOSAL

Date	Estimate #
10/31/2011	517

Name / Address
Menominee County 839 10th Ave Menominee, MI 49858

Terms	Due Date
Due on receipt	10/31/2011

Item	Description	Cost	Qty	Total
	Boiler 1 Boiler 2 Boiler 3 DDC monitor points will consist of Boiler 1 alarm Boiler2 alarm Boiler3 alarm chiller status primary pump 1 primary pump2 DDC analog point consist of outside air temp chilled water temp supply chilled water temp return boiler 1 outlet hot water supply temp boiler 2 outlet hot water supply temp boiler 3 outlet hot water supply temp DDC system with graphic interface will tie onto the existing Siemens system that was installed in jail			

Thank you for your business. Dave Dunn

Subtotal	
Sales Tax (0.0%)	
Total	

Signature _____

Phone #	Fax #
906-563-9129	906-563-8610

VALLEY MECHANICAL, INC.

PO BOX 159
W6106 OAK CREST DRIVE
NORWAY, MI 49870

PROPOSAL

Date	Estimate #
10/31/2011	517

Name / Address
Menominee County 839 10th Ave Menominee, MI 49858

Terms	Due Date
Due on receipt	10/31/2011

Item	Description	Cost	Qty	Total
credit	$2500.00 allowance Valley mechanical included for controls in original bid	-2,500.00		-2,500.00T

Thank you for your business. Dave Dunn

Subtotal	$30,986.25
Sales Tax (0.0%)	$0.00
Total	$30,986.25

Signature _____

Phone #	Fax #
906-563-9129	906-563-8610

MENOMINEE COUNTY BOARD OF COMMISSIONERS
AGENDA ITEM

SUBJECT:	**Courthouse Bell Display**
DEPARTMENT:	**Administration**
ATTACHMENTS:	**No**

SUMMARY:

Ms. Pat Krah, from the Women's Club, would like to discuss and present an option for displaying the Courthouse Bell. Mrs. Krah will be providing a drawing of the proposal at the meeting and will be asking for input from the board.

RECOMMENDED MOTION

To approve the proposed project diagram from the Menominee Women's Club and allow the club to solicit funding for the Menominee County Bell Shelter (display) project.

Submitted by: Brian Bousley **11/17/2011**
Date

WORKSHOP ACTION

	Forwarded to County Board for Approval as Recommended
	Reviewed with no motion to carry forward
	Continue after additional review/research is obtained
	Recommended with the following change(s):

COUNTY BOARD ACTION **DATE:**

	Approved
	Disapproved
	Approved with the following change(s):

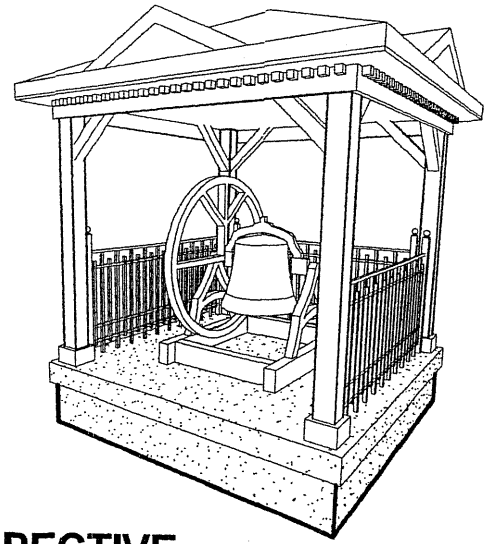

1 PERSPECTIVE

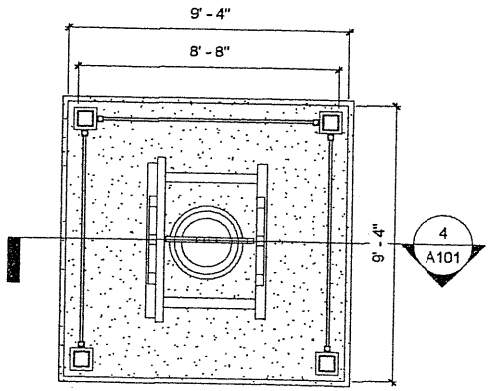

PROJECT NORTH

2 FLOOR PLAN
1/4" = 1'-0"

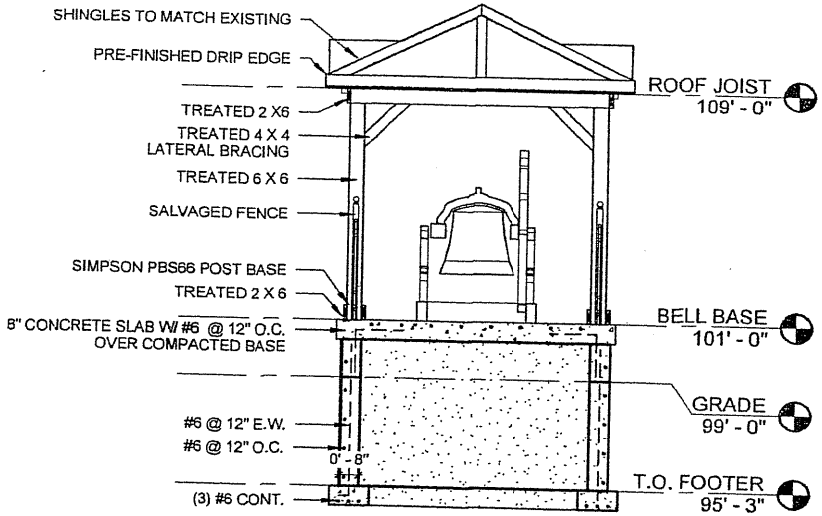

4 SECTION
1/4" = 1'-0"

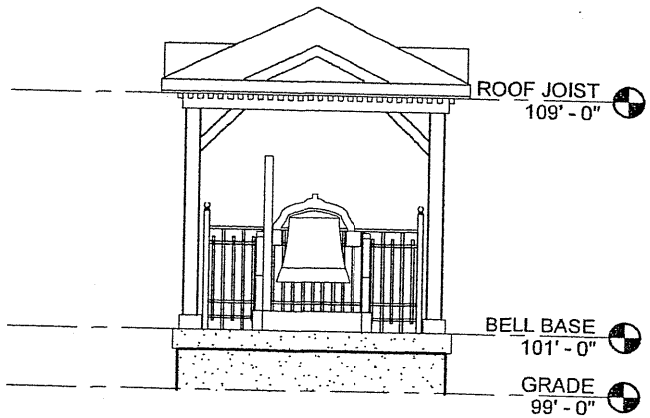

3 FRONT ELEVATION
1/4" = 1'-0"

ISSUED FOR: PATRICA KRAH
DATE: 11-1-11
PROJ NO: Project Number
DRW: LB
APP: JS

ARCHITECTURAL
A101

PROJECT TITLE:
MENOMINEE COUNTY BELL SHELTER

OWNER:
MENOMINEE WOMENS CLUB

PROJECT LOCATION:
Enter address here

11/2/2011 10:43:01 AM

MENOMINEE COUNTY BOARD OF COMMISSIONERS
AGENDA ITEM

SUBJECT:	**MERS ~ Administrator Division**
DEPARTMENT:	**Administration**
ATTACHMENTS:	**Yes**

SUMMARY:

During the July 12, 2011 CB Meeting the board had agreed to a resolution allowing the Administrator Division to move to a Hybrid plan for all new hires. The originally approved resolution from MERS had December of 2009 as the original start date for the plan. The resolution needs to be amended to state a new date of October 1, 2011. This will save the County money from having to apply contributions from December of 2009 to the present.

RECOMMENDED MOTION

to approve the amended MERS resolution for the Administrator Division to move to a Hybrid plan, to begin on October 1, 2011.

Submitted by: Brian Bousley **11/17/2011**
Date

WORKSHOP ACTION

	Forwarded to County Board for Approval as Recommended
	Reviewed with no motion to carry forward
	Continue after additional review/research is obtained
	Recommended with the following change(s):

COUNTY BOARD ACTION **DATE:**

	Approved
	Disapproved
	Approved with the following change(s):

MERS Restated Uniform Hybrid Program (Benefit Program H) Resolution

1134 Municipal Way Lansing, MI 48917 | 800.767.2308 | Fax 517.703.9711 www.mersofmich.com

WHEREAS, under the Municipal Employees Retirement Act of 1984, section 36(2)(a); MCL 38.1536(2)(a); Plan Document Section 36(2)(a), provides the Retirement Board (effective August 15, 1996):

> [s]hall determine and establish all of the provisions of the retirement system affecting benefit eligibility, benefit programs, contribution amounts, and the election of municipalities, judicial circuit courts, judicial district courts, and judicial probate courts to be governed by the provisions of the retirement system ... [and] to establish additional programs including but not limited to defined benefit, defined contribution, ancillary benefits, health and welfare benefits, and other post employment benefit programs (as amended by 2004 PA 490).

WHEREAS, pursuant to the Board's powers, the MERS Plan Document of 1996 was adopted effective October 1, 1996, and the Plan has been amended periodically by the Board.

WHEREAS, the MERS Plan, an agent, multiple employer, public employee pension plan, has been determined by the Internal Revenue Service to be a governmental plan that is tax qualified as a trust under Code section 401(a) and exempt from taxation under section 501(a) (Letter of Favorable Determination dated June 15, 2005; and letter dated July 8, 1997).

WHEREAS, on March 14, 2006, the Retirement Board has authorized establishment of a Hybrid Plan, with a defined benefit (DB) and defined contribution (DC) component.

WHEREAS, new Section 19B, Benefit Program H, and related plan amendments, create a new Hybrid Program that a participating municipality or court may adopt for MERS members to be administered in whole or in part under the discretion of the Municipal Employees' Retirement Board as trustee and fiduciary, directly by (or through a combination of) MERS or MERS duly-appointed third-party administrator for the DC component.

WHEREAS, this Uniform Hybrid Program Resolution has been approved by the Retirement Board under the authority of MCL 38.1536(2)(a); Plan section 36(2)(a) declaring that the Retirement Board "shall determine . . . and establish" all provisions of the retirement system. Under this authority, the Retirement Board authorized Section 19B, Benefit Program H, which shall not be implemented unless in strict compliance with the terms and conditions of this Resolution as provided under section 19B(2):

- In the event any alteration of any provision of this section 19B, or other sections of the Plan Document related to the provisions of Benefit Program H, is made or occurs, under section 43B of the Plan Document concerning collective bargaining or under any other plan provision or law, adoption of Benefit Program H shall not be recognized, other than in accordance with this section and other sections of the Plan Document related to the provisions of Benefit Program H.
- In the event any alteration of the terms or conditions stated in this Uniform Resolution is made or occurs, it is expressly recognized that MERS and the Retirement Board, as sole trustee and fiduciary of the MERS Plan and its trust reserves, and whose authority is nondelegable, shall have

no obligation or duty: to administer (or to have administered) the Benefit Program H; to authorize the transfer of any Plan assets to the Hybrid Program; or to continue administration by MERS directly or indirectly, or by any third-party administrator.

WHEREAS, concurrent with this Resolution, and as a continuing obligation, this governing body has completed and approved, and submitted to MERS, documents necessary for adoption and implementation of MERS Benefit Program H.

NOW, THEREFORE, BE IT RESOLVED that the governing body adopts MERS Benefit Program H (Hybrid Program) as provided below.

I. **NEW EMPLOYEES** (Plan Sec 19B(4) – (12))

Effective the first day of October 1, 2011, (to be known as the ADOPTION DATE), the MENOMINEE COUNTY BOARD (MERS municipality/court) hereby adopts Benefit Program H for DIVISION 17 (specify division numbers) first hired or rehired to the division at any time on and after the Adoption Date, and optional participation for any employee or officer of this municipality otherwise eligible to participate in MERS under Section 2B(3)(a) of the Plan Document who has previously elected to not participate in MERS. The employer shall establish the transfer rule for transferred employees in the Employer Resolution Establishing a Uniform Transfer Provision. **ONLY THOSE EMPLOYEES ELIGIBLE FOR MERS MEMBERSHIP (SECTIONS 2B(3) AND 3 OF THE PLAN DOCUMENT) SHALL BE ELIGIBLE TO PARTICIPATE.**

(A) HYBRID PLAN CONTRIBUTIONS

- The DB Component shall be exclusively funded by the employer, with no member contributions permitted.
- For the DC Component, employee and employer contributions shall be required as allowed and specified in Plan section 19B(8) and the MERS Uniform Hybrid DC Component Adoption Agreement ("Adoption Agreement," Attachment 1, completed and approved and a certified copy submitted to MERS concurrent with and incorporated by reference in this Resolution). A member is immediately 100% vested in any employee contributions, and is vested in employer contributions under the employer vesting schedule.

(B) COMPENSATION AND EARNINGS

- For the DB Component, earnings shall include items of "Compensation" under Section 2A(6) of the MERS Plan Document, **with the exception of the last sentence, which shall not apply.**
- For the DC Component, earnings shall include items of "Compensation" under Section 2A(6) of the MERS Plan Document as provided for Benefit Program DC, which equals the Medicare taxable wages as reported by the employer on the member's federal form W-2, wage and tax statement.

no obligation or duty: to administer (or to have administered) the Benefit Program H; to authorize the transfer of any Plan assets to the Hybrid Program; or to continue administration by MERS directly or indirectly, or by any third-party administrator.

WHEREAS, concurrent with this Resolution, and as a continuing obligation, this governing body has completed and approved, and submitted to MERS, documents necessary for adoption and implementation of MERS Benefit Program H.

NOW, THEREFORE, BE IT RESOLVED that the governing body adopts MERS Benefit Program H (Hybrid Program) as provided below.

I. NEW EMPLOYEES (Plan Sec 19B(4) – (12))

Effective the first day of _____, 20___, (to be known as the ADOPTION DATE), the

_____ hereby adopts Benefit Program H for
(MERS municipality/court)

_____
(specify division numbers)

first hired or rehired to the division at any time on and after the Adoption Date, and optional participation for any employee or officer of this municipality otherwise eligible to participate in MERS under Section 2B(3)(a) of the Plan Document who has previously elected to not participate in MERS. The employer shall establish the transfer rule for transferred employees in the Employer Resolution Establishing a Uniform Transfer Provision. **ONLY THOSE EMPLOYEES ELIGIBLE FOR MERS MEMBERSHIP (SECTIONS 2B(3) AND 3 OF THE PLAN DOCUMENT) SHALL BE ELIGIBLE TO PARTICIPATE.**

(A) HYBRID PLAN CONTRIBUTIONS

- The DB Component shall be exclusively funded by the employer, with no member contributions permitted.
- For the DC Component, employee and employer contributions shall be required as allowed and specified in Plan section 19B(8) and the MERS Uniform Hybrid DC Component Adoption Agreement ("Adoption Agreement," Attachment 1, completed and approved and a certified copy submitted to MERS concurrent with and incorporated by reference in this Resolution). A member is immediately 100% vested in any employee contributions, and is vested in employer contributions under the employer vesting schedule.

(B) COMPENSATION AND EARNINGS

- For the DB Component, earnings shall include items of "Compensation" under Section 2A(6) of the MERS Plan Document, **with the exception of the last sentence, which shall not apply.**
- For the DC Component, earnings shall include items of "Compensation" under Section 2A(6) of the MERS Plan Document as provided for Benefit Program DC, which equals the Medicare taxable wages as reported by the employer on the member's federal form W-2, wage and tax statement.

(C) HYBRID PLAN VESTING

- For the DB Component, 6 year vesting is mandatory (Plan Sec 19B(5)(b)).
- For the DC Component, employee and employer contributions shall be required as allowed and specified in Plan section 19B(8) and the Adoption Agreement (Attachment 1, completed and approved and a certified copy submitted to MERS concurrent with and incorporated by reference in this Resolution). A member is immediately 100% vested in any employee contributions, and is vested in employer contributions under the employer vesting schedule.
- As provided in Section 19B(3):

  Where a member has previously acquired in the employ of any participating municipality or participating court:

  (a) not less than 1 year of defined benefit service in force (including Hybrid Program) with any participating municipality or participating court;

  (b) eligible credited service where the participating municipality or participating court has adopted the Reciprocal Retirement Act, 1961 PA 88;

  (c) at least 12 months in which employer contributions by a participating municipality or participating court have been made on behalf of the member under Benefit Program DC or Hybrid Program, such service shall be applied toward satisfying the vesting schedule for the DB Component, and for the DC Component, for employer contributions.

(D) BENEFITS UNDER HYBRID PLAN

- For the DB component:

  (1) The Benefit Multiplier (Plan Section 19B(4)) **initially selected shall be irrevocable, shall not later be changed and** shall be the one here specified (select only one of the following):

  ☐ (a) 1.0 % times (x) years of service times (x) FAC
  ☐ (b) 1.25% times (x) years of service times (x) FAC
  ☐ (c) 1.5% times (x) years of service times (x) FAC

  (2) Final Average Compensation (FAC) shall be FAC-3 (Plan Section 19B(6)).

  (3) The Benefit shall be payable at age 60 (Plan Section 19B(5)(b)).

  (4) Credited Service shall be comprised solely of the sum of (a) the total of the member's credited service (if any) under the previous DB program on the effective date of coverage under the Hybrid Plan (Plan Section 19B(16)(b)(ii); see II (E)(b)(ii) below); plus (b) credited service earned by the member after the effective date of coverage under the Hybrid Plan (Plan Section 19B(17)(b)).

- For the DC Component (Plan Section 19B(12)):

Upon termination of membership, a vested former member or a beneficiary, as applicable, shall elect one or a combination of several of the following methods of distribution of the vested former member's or beneficiary's accumulated balance, to the extent allowed by federal law and subject to Plan Section 19B(11)(b) and procedures established by the Retirement Board:

(1) Lump sum distribution to the vested former member or beneficiary.

(2) Lump sum direct rollover to another eligible retirement plan, to the extent allowed by federal law.

(3) Annuity for the life of the vested former member or beneficiary, or optional forms of annuity as determined by the Retirement Board.

(4) No distribution, in which case the accumulated balance shall remain in the retirement system, to the extent allowed by federal law.

STOP If covering new employees only, skip II and III and go to IV on page 9. **STOP**

II. OPTIONAL PROVISION FOR CURRENT MERS DEFINED BENEFIT MEMBERS WHERE HYBRID PROGRAM FOR NEW EMPLOYEES ESTABLISHED (FOR TRANSFERS FROM MERS DEFINED CONTRIBUTION PROGRAM, SEE SECTION III)

(Plan Sec 19B(13)-(16))

THIS OPTIONAL SECTION SHALL ONLY BE SELECTED WHERE THE TOTAL FUNDED PERCENT OF AGGREGATE ACCRUED LIABILITIES AND VALUATION ASSETS OF ALL RESERVES SPECIFIED IN TABLE 13 (OR SUCCESSOR TABLE) FOR THE PARTICIPATING MUNICIPALITY OR COURT, AND FOR THE AFFECTED MEMBER BENEFIT PROGRAM CLASSIFICATION(S) (DIVISION(S)) SPECIFIED IN THE MOST RECENT MERS ANNUAL ACTUARIAL VALUATION REPORT IS AT LEAST EIGHTY PERCENT (80%).

IT IS ADDITIONALLY RESOLVED, as provided in each of the following paragraphs:

(A) Effective on the **Adoption Date**, pursuant to Plan Section 19B(13):

all current MERS defined benefit members who are members of the same employee classification described in Section I above on the Adoption Date shall be offered the opportunity to irrevocably elect coverage under Benefit Program H. Section 19B(14) specifies an employee's written election to participate shall be filed with MERS: (a) not earlier than the last day of the third month after this Resolution is adopted and received by MERS; and (b) not later than the first day of the first calendar month that is at least six months after MERS receives this Resolution. This means each eligible employee will have about 90 days to make the decision.

After MERS receives this Resolution, this governing body's authorized official and eligible employees will be advised by MERS of the election window timelines and other information to consider in making the irrevocable decision whether to participate in Benefit Program H.

Participation for those electing coverage shall be effective the first day of the first calendar month at least six (6) months after MERS' receipt of the Resolution, here designated as being the month of _____, 20____, (insert month and year) which shall be known as the "**CONVERSION DATE.**"

The opportunity for current employees on the **Adoption Date** to participate in the Hybrid Program shall (select 1 of the following 2 choices):

☐ apply to all employees who separate from or terminate employment with this municipality after the **Adoption Date** and before the **Conversion Date**, so long as the employee does not receive a retirement allowance (including distributions from Benefit Programs DC or H) from MERS based on service for this municipality.

☐ not apply to any employee who separates from or terminates employment with this municipality after the Adoption Date.

(B) CONTRIBUTIONS shall be as provided in Section I (A) above.

(C) COMPENSATION AND EARNINGS shall be as provided in Section I (B) above.

(D) HYBRID PLAN VESTING shall be as provided in Section I (C) above.

(E) For each employee irrevocably electing to participate in Benefit Program H, then under Plan Section 19B(16), the Retirement Board shall transfer the following amounts from the reserve for employee contributions and the reserve for employer contributions and benefit payments to the reserve for defined contribution plan:

(a) The member's accumulated contributions, if any, as of 12:01 a.m. on the day the member becomes covered by Benefit Program H shall be transferred from the reserve for employee contributions to the member's credit in the reserve for Benefit Program H Defined Contribution component.

(b) The funded excess present value shall be computed as the excess, if any, of the actuarial present value of the accrued benefit associated with the member's coverage under the previous benefit program, over the actuarial present value of the accrued benefit associated with the member's coverage under the defined benefit component of Benefit Program H, after such excess is multiplied by the funded level percentage selected by the governing body in subparagraph(F)(2) below (which shall not be less than 80% nor exceed 100% funded level percentage in any case). The excess, if any, of the funded excess present value over the amount specified in sub-paragraph (a) shall be transferred from the reserve for employer contributions and benefit payments to the member's credit in the reserve for Benefit Program H Defined Contribution component. For purposes of this sub-paragraph:

(i) The actuarial present values shall be computed as of 12:01 a.m. on the day the member becomes covered by Benefit Program H and shall be based on the actuarial assumptions adopted by the Retirement Board.

(ii) On the effective date of the change of the benefit program the member's credited service under Benefit Program H shall be equal to the member's credited service under the previous benefit program.

(iii) In determining final average compensation there shall not be included any accrued annual leave.

(iv) The earliest retirement date (for an unreduced benefit) assumption under the defined benefit program in effect on the effective date of the change of the benefit program shall be utilized. Likewise the earliest retirement date assumption under Benefit Program H shall be utilized.

(v) For purposes of the actuarial present value calculation, any future benefit otherwise payable under Benefit Program E or E-1 shall be disregarded.

The transfer shall be made approximately 30 calendar days after the **Conversion Date**, and the transfer amount shall include pro-rated regular interest at the regular Board-established rate for crediting of interest on member's accumulated contributions in the defined benefit program, measured from the **Conversion Date** to the actual transfer date.

(F) Per Plan Section 19B(16)(b), the Retirement Board has established the assumptions for calculation of the actuarial present value of a member's accrued benefit that may be transferred. The assumptions are:

(1) **The interest rate in effect as of the Adoption Date, to determine actuarial present value, shall be the Board-established investment earnings rate assumption (currently eight percent (8.00%)).**

(2) **The funded level for the member's specific MERS division** (total funded percentage of the present value of accrued benefits which shall be determined using Termination Liability under Table 12 or successor table and valuation assets of all reserves using Table 13) as of the Adoption Date from the most recent MERS annual actuarial valuation report data provided by MERS actuary. In the APV calculation, the funded level used shall be (select one of the following):

☐ Table 12 Termination Liability funded level for the division (not less than 80% nor to exceed 100% funded level).

☐ If greater than the division's funded level but not more than 100% funded level, then MERS is directed to compute the funded percentage for the transfer calculation on _____% funded basis (insert number greater than the division's Table 12 Termination Liability funded level percentage but not more than 100%). Where less than 100% funded level exists, this governing body recognizes that such direction shall increase its pension funding liability. MERS shall not implement such direction unless the governing body forwards to MERS sufficient cash up to the funded level selected for all members prior to the **Conversion Date**; if sufficient cash is not forwarded, then the governing body expressly covenants with MERS and directs, as a condition of this selection, to MERS billing and the governing body remitting to MERS all contributions necessary to fund the unfunded liability occasioned by the aggregate transfer of the difference between the actual funded level for the division and funded level directed above over a period of four (4) years.

III. TRANSFER OF CURRENT MERS DEFINED CONTRIBUTION PROGRAM MEMBERS WHERE HYBRID PROGRAM FOR NEW EMPLOYEES ESTABLISHED Plan Sec 19B(13) – (15), (17)

IT IS ADDITIONALLY RESOLVED, as provided in each of the following paragraphs:

(A) Effective on the **Adoption Date**, pursuant to Plan Section 19B(13) all current MERS defined contribution members who are members of the same employee classification described in Section I above on the **Adoption Date** shall be offered the opportunity to irrevocably elect coverage under Benefit Program H. Section 19B(14) specifies an employee's written election to participate shall be filed with MERS: (a) not earlier than the last day of the third month after this Resolution is adopted and received by MERS; and (b) not later than the first day of the first calendar month that is at least six months after MERS receives this Resolution. This means each eligible employee will have about 90 days to make the decision.

After MERS receives this Resolution, this governing body's authorized official and eligible employees will be advised by MERS of the election window timelines and other information to consider in making the irrevocable decision whether to participate in Benefit Program H.

Participation for those electing coverage shall be effective the first day of the first calendar month at least six (6) months after MERS' receipt of the Resolution, here designated as being the month of _____, 20____, (insert month and year), which shall be known as the "**CONVERSION DATE.**"

The opportunity for current employees on the **Adoption Date** to participate in the Hybrid Program shall (select 1 of the following 2 choices):

☐ apply to all employees who separate from or terminate employment with this municipality after the **Adoption Date** and before the **Conversion Date**, so long as the employee does not receive a retirement allowance (including distributions from Benefit Programs DC or H) from MERS based on service for this municipality.

☐ not apply to any employee who separates from or terminates employment with this municipality after the **Adoption Date**.

(B) CONTRIBUTIONS shall be as provided in Section I (A) above.

(C) COMPENSATION AND EARNINGS shall be as provided in Section I (B) above.

(D) HYBRID PLAN VESTING shall be as provided in Section I (C) above.

(E) For each employee irrevocably electing to participate in Benefit Program H, then under Plan Section 19B(17), the following shall apply:

(a) The member's accumulated balance in the reserve for defined contribution plan under Benefit Program DC, if any, as of 12:01 a.m. on the day the member becomes covered by Benefit Program H shall be transferred to the member's credit in the reserve for defined contribution plan under Benefit Program H Defined Contribution component.

(b) For purposes of calculating benefit amounts under the defined benefit component of Benefit Program H, only credited service earned after 12:01 a.m. on the day the member becomes covered by Benefit Program H shall be recognized.

IV. THIRD PARTY ADMINISTRATION

The Municipal Employees' Retirement Board retains full and unrestricted authority over the administration of MERS Benefit Program H, including but not limited to the appointment and termination of the third-party administrator, or MERS self-administration of the defined contribution program in whole or in part.

V. EFFECTIVENESS OF THIS RESOLUTION

BE IT FINALLY RESOLVED: This Resolution shall have no legal effect under the MERS Plan Document until a certified copy of this adopting Resolution shall be filed with MERS, and MERS determines that all necessary requirements under Plan Document Section 19B, this Resolution, and other applicable requirements have been met. All dates for implementation of Benefit Program H under Section 19B shall be determined by MERS from the date of filing with MERS of this Resolution in proper form and content. Upon MERS determination that all necessary documents have been submitted to MERS, MERS shall record its formal approval upon this Resolution, and return a copy to the Employer's Hybrid Program Plan Coordinator identified in Section IV (D) above.

In the event an amendatory Resolution or other action by this Governing Body is required, such Resolution or action shall be deemed effective as of the date of the initial Resolution or action where concurred in by this governing body and MERS (and the third-party administrator if necessary). Section 54 of the Plan Document shall apply to this Resolution and all acts performed under its authority. The terms and conditions of this Resolution supersede and stand in place of any prior resolution, and its terms are controlling.

I hereby certify that the above is a true copy of a Resolution adopted at the official meeting held

on _____, 20_____ _____

(Signature of authorized official)

Please send MERS fully executed copy of:

- MERS 2010 Restated Uniform Hybrid Program (Benefit Program H) Resolution (this form, MD-043)
- MERS Restated Hybrid Plan (Defined Contribution Component) Adoption Agreement (form MD-044)
- Declaration of Trust and certified minutes stating governing body approval, and/or union contract language

Received and Approved by the Municipal Employees' Retirement System of Michigan

Dated: _____, 20_____ _____

(Authorized MERS signatory)

MENOMINEE COUNTY BOARD OF COMMISSIONERS
AGENDA ITEM

SUBJECT:	**HRA Resolution**
DEPARTMENT:	**Administration**
ATTACHMENTS:	**Yes**

SUMMARY:

Resolution authorizes the administration of the HRA to be continued to be offered to the employees of Menominee County and authorizing Employee Benefits Agency, Inc. to administer the HRA plan for the county.

RECOMMENDED MOTION

to approve Resolution 2011-17 ~ Authorizing Employee Benefits Agency, Inc. to administer the HRA plan for Menominee County.

Submitted by: Brian Bousley **11/17/2011**
Date

WORKSHOP ACTION

	Forwarded to County Board for Approval as Recommended
	Reviewed with no motion to carry forward
	Continue after additional review/research is obtained
	Recommended with the following change(s):

COUNTY BOARD ACTION **DATE:**

	Approved
	Disapproved
	Approved with the following change(s):

"Menominee – Where the best of Michigan Begins"

MENOMINEE COUNTY BOARD OF COMMISSIONERS

Menominee County Courthouse
839 10th Avenue
Menominee, MI 49858

Brian R. Bousley– County Administrator
Sherry Smith – Administrative Assistant
Telephone: (906) 863-7779 or 863-9648
Fax: (906) 863-8839

Resolution 2011-17

Board of Commissioners Resolution Authorizing Employee Benefits Agency Inc. to Provide Health Reimbursement Plan to the Employees of Menominee County.

Whereas there has been presented and approved by consensus of the Menominee County Board of Commissions to provide the employees of Menominee County with the benefit of a Health Reimbursement Plan, and;

Whereas, the Menominee County Board of Commissioners and County Administrator have reviewed the terms of the Plan and finds the Plan to be a benefit for the County to enter into such a Plan for the exclusive use of the Employees of Menominee County.

Now Therefore it is Resolved, that the Menominee County Board of Commissioners authorizes to execute such documents necessary to commence the Plan,

Be it Further Resolved, that the Menominee County Board of Commissioners hereby consents to enter into agreements with legal, financial, administrative or professional services required and necessary to carry out the desires of the Menominee County Board of Commissioners and provide the Health Reimbursement Plan to the Employees of Menominee County.

_____ _____
James Furlong, Chairman Date

_____ _____
Marc Kleiman, Clerk Date

James Furlong – Chairperson *Bernie Lang – Vice Chairperson*

Jim Pearson *Charlie Meintz* *Mark Jasper*

MENOMINEE COUNTY BOARD OF COMMISSIONERS
AGENDA ITEM

SUBJECT:	**Three Way Road Program**
DEPARTMENT:	**Administration**
ATTACHMENTS:	**Yes**

SUMMARY:

June 28, 2011 County Commissioners approved the Three way road program funds account # 101-997.999.31 become a carryover account. At that time, it **was not** voted on to transfer the funds budgeted in this account.
County Board is asked to transfer $200,000 from account #101-997-999.31 (FY 2010-11) into account #401-000-699.00 for the County portion of the Three way road program, to be carried over into FY 2011-12.

RECOMMENDED MOTION

to approve the transfer of $200,000 from account #101-997-999.31 (FY 2010-11) into account #401-000-699.00 for the County portion of the Three Way road Program Funding, to be carried over into FY 2011-12.

Submitted by: Brian Bousley **11/17/2011**
Date

WORKSHOP ACTION

	Forwarded to County Board for Approval as Recommended
	Reviewed with no motion to carry forward
	Continue after additional review/research is obtained
	Recommended with the following change(s):

COUNTY BOARD ACTION **DATE:**

	Approved
	Disapproved
	Approved with the following change(s):

MENOMINEE COUNTY BOARD OF COMMISSIONERS
AGENDA ITEM

SUBJECT:	**MOA ~ Center for shared solutions and technology partnerships**
DEPARTMENT:	**E-9-1-1**
ATTACHMENTS:	**Yes**

SUMMARY:

Commissioners are asked to look over the MOA and approve. This is for the utilization of GIS data for 9-1-1 and public safety purposes.

RECOMMENDED MOTION

To approve the MOA

Submitted by: Brian Bousley **11/17/2011**
Date

WORKSHOP ACTION

	Forwarded to County Board for Approval as Recommended
	Reviewed with no motion to carry forward
	Continue after additional review/research is obtained
	Recommended with the following change(s):

COUNTY BOARD ACTION **DATE:**

	Approved
	Disapproved
	Approved with the following change(s):

MEMORANDUM OF AGREEMENT
BETWEEEN
CENTER FOR SHARED SOLUTIONS AND TECHNOLOGY PARTNERSHIPS
AND
Menominee County

1. Parties

This Memorandum of Agreement (MOA) is entered into by and for the Center for Shared Solutions and Technology Partnerships (CSSTP) and Menominee County.

The CSSTP is an office within the Michigan Department of Technology, Management & Budget (DTMB) charged with fostering technological collaboration across government by sharing resources to eliminate duplication of effort and reducing costs. The Menominee County is located within the boundaries of the State of Michigan. The CSSTP and the PSAP are hereinafter collectively referred to as "the parties."

2. Background

The Michigan State Police (MSP) 9-1-1 Administration Section received funding through a joint National Highway Traffic Safety Administration (NHTSA) and National Telecommunication and Information Administration (NTIA) Ensuring Needed Help Arrives Near Callers Employing 9-1-1 (ENHANCE 9-1-1) grant, in September of 2009, to develop a statewide geographic information system (GIS) database repository for the 9-1-1 community. This statewide integrated GIS data repository will be a system to provide the replication capabilities for PSAPs to provide GIS 9-1-1 datasets into architecture that will integrate the datasets statewide and also receive data updates on a regular basis.

3. Purpose

The purpose of this MOA is to establish a mutual framework governing the respective organizational relationships, responsibilities, and activities between the parties. This agreement is for the utilization of GIS data for 9-1-1 and public safety purposes within a statewide 9-1-1 GIS repository developed by CSSTP (9-1-1 GIS Program).

4. Definitions

Third party: an organization or individual that is not a participant in the 9-1-1 GIS Program.

GIS datasets: geographic information systems data, spatial features and associated database tables that are stored within the 9-1-1 GIS repository

Data originator: Author or business owner of the GIS dataset and information contained within the GIS dataset.

PSAP: Public Safety Answering Point

5. Responsibilities of the Parties

The following paragraphs identify responsibilities of the parties involved:

a. CSSTP Responsibilities. CSSTP will provide Menominee County, in accordance with the purpose, terms, and conditions of this MOA and implementing arrangements, as appropriate, with the following:

(1) Utilize its in-house technical and contract resources for the development of the statewide GIS 9-1-1 repository, which will include GIS datasets provided by Menominee County.

(2) Provide interface and/or workflows to Menominee County for data uploads to statewide GIS 9-1-1 repository.

(3) Provide training to Menominee County for data uploading.

(4) Provide quality assurance checks and error detection reports to Menominee County.

(5) Provide extract of regional dataset or statewide dataset to Menominee County for 9-1-1 systems.

b. The Menominee County will provide CSSTP, in accordance with the purpose, terms, and conditions of this MOA and implementing arrangements, as appropriate, with the following:

(1) Provide GIS dataset updates, without fee or cost, to CSSTP through data uploading interface.

(2) Provide error resolution to CSSTP with regard to error detection reports within XX hours of receiving the error detection report.

6. GIS data use.

Menominee County authorizes its 9-1-1 GIS data to be used by other PSAPs that are participating in the 9-1-1 GIS Program and who may request regional datasets to be used in their 9-1-1 systems.

In the event that a third party requests data, one of the following three scenarios will also apply:

1) If Menominee County receives a request for their own data, that request shall be subject to the Menominee County own Enhanced Access to Public Records policy. There is no need for the request to go through or be approved by DTMB/CSSTP.

2) In the event that CSSTP receives a request for the data included in the statewide 9-1-1 GIS repository, such requests will be honored pursuant to DTMB's Enhanced Access to Public Records Act policy 100.27 and associated fee schedule. As a result of any data requests that are honored in accordance with DTMB's Enhanced Access to Public Records Act policy 100.27 and fee schedule, CSSTP will pass on applicable fees, pursuant to the Menominee County 's local Enhanced Access to Public Records policy.

3) If Menominee County receives a request for any data that they have downloaded from the statewide 9-1-1 GIS repository, they will provide the data according to the fees outlined by the CSSTP in the fee schedule for each 9-1-1 GIS Program participant. Menominee County shall then provide the collected fees to the CSSTP who shall then disperse the funds back to the respective -1-1 GIS Program

participants from which the data came. Menominee County may also charge an administrative fee to disperse the data as outlined in their local Enhanced Access to Public Records policy.

The partied agree to exercise all applicable exemptions available under the Freedom of Information Act to comply with the following restrictions to distribution of GIS datasets from the 9-1-1 repository:

- Emergency Service Zone, PSAP, Fire, Police and EMS boundaries will not be re-distributed to a third party.
- Only the addressing fields on road centerlines and site structure points will be provided to a third party.
- Any features that provide information about critical infrastructure or secure facilities will not be provided to a third party.

The data originator will be notified when any third party request is made for their data prior to release of the datasets.

In accordance with the Emergency 9-1-1 Service Enabling Act (Act 32 of 1986), any confidential information, name, address and telephone number information, provided to a 9-1-1 system by a service provider shall remain protected as outlined in the Act, in the event that this 9-1-1 system data is provided to the GIS repository. [1986 PA 32 is repealed as of December 31, 2014 by 2008 PA 379]

7. Amendment and Modification

This MOA may be amended or modified only by written, mutual agreement of the parties.

8. Termination

Either Party may terminate this MOA with sixty (60) days written notice for any.

Upon termination of this MOA, data provided to CSSTP under this MOA by Menominee County shall remain in the repository and but will no longer be updated. Remaining data shall be marked that it has not been updated as of the date of the last update prior to termination. Menominee County will no longer be eligible to receive data from the repository for use in their own systems except as a third party.

9. Dispute Resolution

In the event of a dispute between the parties, Menominee County and CSSTP agree to use their best efforts to resolve that dispute in an informal fashion through consultation and communication, or other forms of non-binding alternative dispute resolution mutually acceptable to the parties. The parties agree that, in the event such measures fail to resolve the dispute; prior to any formal action being taken, they shall refer it for resolution to a committee of three neutral 9-1-1 GIS Program participants or such other entity as agreed to by the parties.

10. Assignment

This MOA may not be assigned, delegated, or otherwise transferred by the parties, nor may any right, duty, or obligation under this MOA be assigned, delegated, or transferred, unless otherwise provided for in this MOA.

11. Effective Date

This agreement becomes effective upon the date of the last approving signature and will remain in effect indefinitely until superseded, rescinded, or modified by written, mutual agreement of both parties.

12. Communications and Coordination Representatives

To provide for consistent and effective communication between the CSSTP and Menominee County, each party shall appoint a principal representative to serve as its central point of contact on matters relating to this MOA. The principal representatives for this MOA are listed below.

Eric Swanson
Center for Shared Solutions and Technology Partnerships (CSSTP)
Romney Building, 10th Floor
111 S. Capitol St.
Lansing, MI, 48933
Phone No. 517-373-9710
Fax No. 517-373-2939

James Furlong
Menominee County Board Chairman
839 10th Avenue, Menominee, Michigan, 49858
906-863-7779

13. Applicable Laws

The applicable statutes, regulations, directives, and procedures of the State of Michigan shall govern this MOA and all documents and actions pursuant to it.

_____ _____

ERIC SWANSON DATE
Director
Center for Shared Solutions and Technology Partnerships (CSSTP)
Romney Building, 10th Floor
111 S. Capitol St.
Lansing, MI, 48933

_____ _____

James Furlong *Date*
Menominee County Board Chairman
839 10th Avenue, Menominee, Michigan, 49858

MENOMINEE COUNTY BOARD OF COMMISSIONERS
AGENDA ITEM

SUBJECT:	**Enhanced access to digital public records policy**
DEPARTMENT:	**9-1-1**
ATTACHMENTS:	**Yes**

SUMMARY:

In order for the 9-1-1 MOA to be enforced, an enhanced access policy to digital public records info. must be approved.

RECOMMENDED MOTION

To approve resolution 2011-18 Enhanced Access to Digital Public Records policy

Submitted by: Brian Bousley **11/17/2011**
Date

WORKSHOP ACTION

	Forwarded to County Board for Approval as Recommended
	Reviewed with no motion to carry forward
	Continue after additional review/research is obtained
	Recommended with the following change(s):

COUNTY BOARD ACTION **DATE:**

	Approved
	Disapproved
	Approved with the following change(s):

ENHANCED ACCESS TO DIGITAL PUBLIC RECORDS POLICY

Menominee County, Michigan October 2011

Purpose: This policy is established, pursuant to the authority, guidelines, and provisions of the Enhanced Access to Public Records Act, 1996 P.A. 462 MCL 15.443 *et seq,* as amended. The purpose of this Policy is: 1) to establish the definitions and operational provisions for a policy on enhanced access to digital public records, 2) to authorize the establishment of a fee schedule and to establish conditions for its waiver, and 3) to set forth a disclaimer as to all express and implied warranties regarding the access to or the use of public records for which enhanced access is provided.

I DEFINITIONS

A. "The act" shall be interpreted as the Michigan Enhanced access to Public Records Act, 1996 P.A. 462

B. "County" shall refer to the County of Menominee, Michigan.

C. "Digital Ortho-photography" shall be interpreted as a digital image geo-referenced to the earth's surface, captured at an altitude to display natural and man-made features at varying scales and resolutions.

D. "Enhanced access" shall be interpreted as providing digital access to public records (that currently exist in digital format, specifically GIS Data and Tax Records) for public inspection, purchase, or copying by digital means. "Enhanced access" does not include the transfer of ownership of a public record, and does not include public records that do not currently exist in digital format (hardcopy).

E. "Geographic Information System" or "GIS" shall be interpreted as being an informational unit, system, or network capable of producing customized maps based upon a digital representation of geographical data.

F. "Operating Expense(s)" includes, but is not limited to, the County's direct cost of creating, compiling, extracting, storing, maintaining, processing, providing, upgrading, or enhancing information or data in a form available for enhanced access, including the cost of computer hardware, software, data storage media, system development, employee time, and the actual cost of supplying the information or record(s) in the form requested by the purchaser.

G. "Person" shall be interpreted as that term as defined in Section 2 of the Freedom of Information Act No. 442 of the Public Acts of 1976, being Section 15.232 of the Michigan Compiled Laws.

H. "Public Body" shall be interpreted as the term as defined in Section 2 of the Freedom of Information Act No. 442 of the Public Acts of 1976, being Section 15.232 of the Michigan Compiled Laws.

I. "Public Record" shall be interpreted as that term as defined in Section 2 of the Freedom of Information Act No. 442 of the Public Acts of 1976, being Section 15.442 of the Michigan Compiled Laws. Not all public records are available in digital format.

J. "Reasonable Fee" shall be interpreted as a charge calculated to enable a public body to recover over time only those operating expenses directly related to the public body's provision of enhanced access.

K. "Software" shall be interpreted as that term as defined in Section 2 of the Enhanced Access to Public Records Act, Act No. 462 of the Public Acts of 1996, being Section 15.442 of the Michigan Compiled Laws.

II AUTHORIZATION

A. Pursuant to the Act, all Menominee County government public bodies may provide enhanced access for the inspection, copying, or purchasing of a public record that is not confidential or otherwise exempt by law from disclosure. [Sec. 3(1) (a); Sec. 3(3)].

B. This policy does not require Menominee County public bodies to provide enhanced access to any specific public record, if the public record sought is not available through the Menominee County enhanced access system or not available in digital format. [Sec. 3(4)].

C. County elected officials, department heads, agencies, boards, commissions and councils legally responsible for the creation, preparation, ownership, custody, control, maintenance, preservation, guardianship, retention, possession or use of a public record shall select which public records may be made available through enhanced access.

D. Matters to be considered in determining which public records shall be made available through enhanced access include, but are not limited to, the following:

1. Elected officials, department heads, agencies, boards, commissions, councils and other county public bodies legally responsible for the creation, preparation, ownership, custody, control, maintenance, preservation, guardianship, retention, possession or use of a public record have the responsibility, authority and accountability for the management of public record information.

2. Menominee County government, in trust for the people of Menominee County, has a duty to ensure ownership of information products and county created intellectual property is protected, maintained, and enhanced.

3. Menominee County will not release information that may be confidential, proprietary or for which it has signed a non-disclosure agreement.

III FEES

A. It is the policy of Menominee County to charge a reasonable fee for providing access to:

1. A GIS.
2. The output from a GIS.
3. Digital Ortho-photography and related products.
4. Property records and related information.
5. Property Tax records (current and delinquent), and equalization information.
6. Any and all types of additional information the County deems necessary.

B. It is the policy of Menominee County to periodically assess and establish a reasonable fee to charge for access, enhanced or otherwise, to various forms available through technological advancements, improvements, or enhancements or upgrades to existing technology (i.e. online access via the Internet, direct dial-in service to a Menominee County computer, server, information system, etc., electronic mail, CD-ROM, DVD, Optical Archive, solid state drive, storage device, media, paper products, and labels generated by computerized means).

C. Access to and/or output from a County GIS may be provided to another public body for the official use of that other public body without charging a fee to that other public body, upon approval of the Menominee County Board of Commissioners.

D. Except as otherwise provided by act or statute, all persons shall be charged the reasonable fee approved by the Menominee County Board of Commissioners for enhanced access to a public record or for access to a GIS or the output from a GIS.

E. Fees to be charged for enhanced access may be reduced or waived in instance where the request is for the public good. Examples may include, but are not limited to the following instances or occurrences:

1. The information is critical to public health or safety;

2. The information is required for non-profit research purposes such as academic or public interest research;

3. The information is required to meet legal, programmatic or governmental objectives;

4. The information explains rights, entitlements and/or obligations of individuals;

5. The cost of administering the fees would exceed the revenue to be collected;

6. The reasonable fee established would have a serious detrimental impact on the financial position of particular groups or classes of users;

7. The reasonable fee established would limit the number of users enough to compromise achieving program or other governmental objectives.

F. Any and all waivers or fee reductions shall be decided by the Director or Head of the appropriate County Department legally responsible for the creation, preparation, ownership, custody, control, maintenance, preservation, guardianship, retention, possession or use of a public record(s) in question.

G. Upon authorization by the Menominee County Board of Commissioners, the County may enter into agreements with other public bodies to provide enhanced access to public records, to provide access to a GIS, or to obtain output from a GIS, at a reduced fee or at no fee, in accordance with the requirements of Section 3 of the Enhanced Access to Public Records Act.

H. This policy does not apply to public records prepared under an act or statute specifically authorizing the sale of those public records to the public or where the amount of the fee for providing a copy of the public record is otherwise specifically provided by an act or statute.

IV DISCLAIMER

A. This policy does not obligate Menominee County, its elected officials, department heads, agencies, boards, commissions, councils and other county public bodies to provide enhanced access to any specific public record if such public record has not been selected for enhanced access availability pursuant to *Subsection II. C.* of this policy.

B. Recipients of enhanced access receive all information "S IS". Menominee County, its elected officials, officers, department heads, employees, agencies, boards, commissions, councils, volunteers, contractors or its public bodies, make no warranties of any kind, whether express or implied, including but not limited to warranties of accuracy, fitness for a particular purpose, or of a recipient's right to use such public records or information. Recipients are solely responsible for investigating, resisting, litigating and settling such complaints, including the payment of any damages, costs, or attorney's fees, unless the Menominee County Board of Commissioners, by resolution adopted by a majority of those elected and serving, elects to participate in the process at the County's expense. Furthermore, Menominee County, its elected officials, officers, department heads, agencies, boards, commissions, councils, volunteers, contractors, or its public bodies shall not be liable for any inaccuracy or omissions in such information or data and may require recipients to sign a general disclaimer to this affect.

C. Except for the Menominee County Board of Commissioners, by resolution adopted by a majority of those elected and serving, no officer, official, employee, or agent is authorized to make warranties, express or implied, including but not limited to warranties of accuracy, ownership, title, fitness for any particular purpose, or of a recipient's right of use regarding the enhanced public records of Menominee County, its government information systems, or as to the product or output of those systems.

MENOMINEE COUNTY BOARD OF COMMISSIONERS
AGENDA ITEM

SUBJECT:	**Resolution 2011-18 ~ Support of Guaranteed Revenue Replacement**
DEPARTMENT:	**Administration/Board**
ATTACHMENTS:	**yes**

SUMMARY:

Commissioner Lang discussed the possibility of having a resolution be considered for guaranteed revenue replacement, should the state repeal personal property taxes.

RECOMMENDED MOTION

To approve the resolution on behalf of Menominee County, and to distribute to other agencies for their consideration and action.

Submitted by: Brian Bousley **11/17/2011**
Date

WORKSHOP ACTION

	Forwarded to County Board for Approval as Recommended
	Reviewed with no motion to carry forward
	Continue after additional review/research is obtained
	Recommended with the following change(s):

COUNTY BOARD ACTION **DATE:**

	Approved
	Disapproved
	Approved with the following change(s):

"Menominee – Where the best of Michigan Begins"

MENOMINEE COUNTY BOARD OF COMMISSIONERS

Menominee County Courthouse
839 10th Avenue
Menominee, MI 49858

Brian Bousley – County Administrator
Sherry Smith – Administrative Assistant
Telephone: (906) 863-7779 or 863-9648
Fax: (906) 863-8839

RESOLUTION 2011-18

RESOLUTION IN SUPPORT OF GUARANTEED REVENUE REPLACEMENT SHOULD THE STATE REPEAL PERSONAL PROPERTY TAXES

WHEREAS, Michigan counties provide crucial services on behalf of state government, as evidenced by the delivery of road patrol services, corrections, foster care, clean water, food safety, the judicial system, etc.; and

WHEREAS, Years of declining local revenues and cuts to state revenues to counties, coupled with unfunded state mandated services have placed Michigan counties in a position of financial stress; and

WHEREAS, The state has a poor track record of fulfilling its' statutory promises for it's share of funding for things like revenue sharing, payment in lieu of taxes (PILT), public health, Medicaid reimbursement, and county jail reimbursement; and

WHEREAS, Personal property tax revenue represents approx.8.5% of Menominee County's total taxable value; and

WHEREAS, The elimination of personal property taxes would harm a county's ability to provide mandated services to the public; and

WHEREAS, Michigan counties are mandated by the state to pay for the state's court system with local taxpayer dollars; and

WHEREAS, Michigan counties cannot continue to operate if the revenue from personal property taxes is not fully replaced with a constitutionally guaranteed revenue source;

THEREFORE BE IT RESOLVED THAT, the Menominee County Board of Commissioners urges the legislature and the Governor to retain the personal property tax until such time as the residents of Michigan vote in favor of a constitutional amendment that will fully replace the revenues lost from the repeal of personal property taxes; and

BE IT FURTHER RESOLVED that this resolution be distributed to the Governor, Senators, Representatives, and the Michigan Association of Counties for their consideration and action.

Moved by _____, seconded by _____ that the resolution be adopted. Date: _____

_____
Marc Kleiman, County Clerk

James Furlong - Chairperson *Bernie Lang – Vice Chairperson*

Charlie Meintz *Jim Pearson* *Mark Jasper*

MENOMINEE COUNTY BOARD OF COMMISSIONERS
AGENDA ITEM

SUBJECT:	**2011 Apportionment Report**
DEPARTMENT:	**Equalization**
ATTACHMENTS:	**Yes**

SUMMARY:

The County Board approved the 2011 Menominee County Apportionment Report on 10.25.11. with the attached notation. (Note: This report may need to be later amended due to the November elections.) It is now after the elections and the apportionment report needs to be amended to accommodate the change to the Stephenson school millage.

RECOMMENDED MOTION

To approve the 2011 Menominee County Apportionment Report as amended.

Submitted by: Brian Bousley **11/17/2011**
Date

WORKSHOP ACTION

	Forwarded to County Board for Approval as Recommended
	Reviewed with no motion to carry forward
	Continue after additional review/research is obtained
	Recommended with the following change(s):

COUNTY BOARD ACTION **DATE:**

	Approved
	Disapproved
	Approved with the following change(s):

Rev 02/2011

Year	2011

County Name	County Allocated Rate	Total County Extra Voted / General Law Operating Rate	Total County Debt Rate
MENOMINEE	7.0612	1.6978	

Enter County and Local Unit information in columns B through E
Enter Community College and Authority information in columns G through I
Enter ISD and Local K12 School information in columns K through P
Enter information in the yellow highlighted boxes.

Local Unit Name Townships Cities Villages Listed Alphabetically	Total Allocated / Charter Rate	Total Other Extra Voted / General Law Operating Rate	Total Debt Rate
CEDARVILLE TWP.	1.2173	0.4789	
DAGGETT TWP.	1.3210	2.9472	
FAITHORN TWP.	1.2583	1.0000	
GOURLEY TWP.	1.3453	2.6638	
HARRIS TWP.	1.3421	0.9941	
HOLMES TWP.	1.4608	0.9947	
INGALLSTON TWP.	1.1805		
LAKE TWP.	1.2352	0.9776	
MELLEN TWP.	1.3951		
MENOMINEE TWP.	0.0000		
MEYER TWP.	1.3772	1.9976	
NADEAU TWP.	1.3444	0.9451	
SPALDING TWP.	1.3744	1.4589	
STEPHENSON TWP.	1.4066	0.9857	
MENOMINEE CITY	14.8087	5.1777	3.2650
STEPHENSON CITY	7.5000		
CARNEY VLG	0.0000		
DAGGETT VLG	2.5000		
POWERS VLG	2.9211		

Community College Name	Total Operating Rate	Total Debt Rate

Intermediate School District Name (ISD)	ISD Allocated Rate	ISD Total Vocational / Spec Ed Rate	ISD Total Debt Rate	ISD Enhancement Rate	Voc Ed	Sp Ed
DELTA-SCHOOLCRAFT	0.1346	2.2505				
DICKINSON-IRON	0.1671	1.9653				
MENOMINEE	2.2437					

Authority Name (DDA, Dist. Library, Transit, Rec Auth., Fire Auth., etc.) ADD IF NEW	Total Authority Operating Rate	Total Authority Debt Rate
C-MENOMINEE DDA	1.7734	
C-STEPHENSON DDA	1.0000	

Local K12 School District Name	Total Hold Harmless / Supplemental Oper Rate	Total Whole Non Homestead Oper Rate	Total Debt / Sinking Fund / Bldg Site Rate	Total Non Homestead Oper Rate for Comm.Pers.	Total Recreational Rate	Debt	SF
BARK RIVER HARRIS		17.0374	2.6000	5.0374			
CARNEY NADEAU		17.5366	3.5000	5.5366			
MENOMINEE		17.3547	2.5000	5.3547			
NORTH CENTRAL		18.0000	1.3500	6.0000			
NORWAY VULCAN		17.9622	7.4300	5.9622			
STEPHENSON		18.0000	2.2800	6.0000			
				0.0000			
				0.0000			
				0.0000			
				0.0000			
				0.0000			
				0.0000			
				0.0000			
				0.0000			
				0.0000			
				0.0000			
				0.0000			
				0.0000			
				0.0000			
				0.0000			
				0.0000			
				0.0000			
				0.0000			
				0.0000			
				0.0000			
				0.0000			
				0.0000			
				0.0000			
				0.0000			

Statement Showing Mills Apportioned by the County Board of Commissioners of the County of MENOMINEE for the Year 2011

County and Local Unit

(A) County Name	(B) Taxable Value*	(C) County Allocated Rate / SET	(D) Est. County Allocated / SET Tax Dollars	(E) Total County Extra Voted Operating Rate	(F) Est. County EV Oper. Tax Dollars	(G) Total County Debt Rate	(H) Est. County Debt Tax Dollars	(I) Total Est. County Tax Dollars	(BB) Taxable Value of RenZone
MENOMINEE	$668,172,587	7.0612	$ 4,718,100.27	1.6978	$ 1,134,423.42	0.0000	$ -	$ 5,852,523.69	
STATE ED. TAX	$653,769,456	6.0000	$ 3,922,616.74						

*Columns (B) and (K) Exclude Renaissance Zone Taxable Value

Taxable value for SET excludes the Industrial Personal Class of Property.

(J) Local Unit Name Townships Cities Villages Listed Alphabetically	(K) Taxable Value*	(L) Total Allocated / Charter Rate	(M) Est. Local Allocated / Charter Tax Dollars	(N) Total Other Extra Voted / General Law Operating Rate	(O) Est. Local EV / GL Oper Tax Dollars	(P) Total Debt Rate	(Q) Est. Local Debt Tax Dollars	(R) Total Est. Local Tax Dollars	(KK) Taxable Value of RenZone
CEDARVILLE TWP.	$19,419,357	1.2173	$ 23,639.18	0.4789	$ 9,299.93	0.0000	$ -	$ 32,939.11	
DAGGETT TWP.	$17,670,922	1.3210	$ 23,343.29	2.9472	$ 52,079.74	0.0000	$ -	$ 75,423.03	
FAITHORN TWP.	$12,440,532	1.2583	$ 15,653.92	1.0000	$ 12,440.53	0.0000	$ -	$ 28,094.45	
GOURLEY TWP.	$12,203,688	1.3453	$ 16,417.62	2.6638	$ 32,508.18	0.0000	$ -	$ 48,925.81	
HARRIS TWP.	$36,907,156	1.3421	$ 49,533.09	0.9941	$ 36,689.40	0.0000	$ -	$ 86,222.50	
HOLMES TWP.	$30,798,456	1.4608	$ 44,990.38	0.9947	$ 30,635.22	0.0000	$ -	$ 75,625.61	
INGALLSTON TWP.	$44,641,655	1.1805	$ 52,699.47	0.0000	$ -	0.0000	$ -	$ 52,699.47	
LAKE TWP.	$29,147,475	1.2352	$ 36,002.96	0.9776	$ 28,494.57	0.0000	$ -	$ 64,497.53	
MELLEN TWP.	$34,449,912	1.3951	$ 48,061.07	0.0000	$ -	0.0000	$ -	$ 48,061.07	
MENOMINEE TWP.	$107,029,434	0.0000	$ -	0.0000	$ -	0.0000	$ -	$ -	
MEYER TWP.	$26,474,523	1.3772	$ 36,460.71	1.9976	$ 52,885.51	0.0000	$ -	$ 89,346.22	
NADEAU TWP.	$34,077,478	1.3444	$ 45,813.76	0.9451	$ 32,206.62	0.0000	$ -	$ 78,020.39	
SPALDING TWP.	$38,523,926	1.3744	$ 52,947.28	1.4589	$ 56,202.56	0.0000	$ -	$ 109,149.84	
STEPHENSON TWP.	$19,910,937	1.4066	$ 28,006.72	0.9857	$ 19,626.21	0.0000	$ -	$ 47,632.93	
MENOMINEE CITY	$189,959,708	14.8087	$ 2,813,056.33	5.1777	$ 983,554.38	3.2650	$ 620,218.45	$ 4,416,829.15	
STEPHENSON CITY	$14,517,428	7.5000	$ 108,880.71	0.0000	$ -	0.0000	$ -	$ 108,880.71	
CARNEY VLG	$4,531,877	0.0000	$ -	0.0000	$ -	0.0000	$ -	$ -	
DAGGETT VLG	$3,410,068	2.5000	$ 8,525.17	0.0000	$ -	0.0000	$ -	$ 8,525.17	
POWERS VLG	$4,427,379	2.9211	$ 12,932.82	0.0000	$ -	0.0000	$ -	$ 12,932.82	

Statement Showing Mills Apportioned by the County Board of Commissioners of the County of MENOMINEE for the Year 2011

Local K12 School District

(A) Local K12 School District Name	(B) Total Taxable Value*	(C) Total NonHomestead Taxable Value*	(D) Total Commercial Personal Taxable Value*	(E) HH / Supplemental Rate	(F) Est. HH / Supplemental Tax Dollars	(G) Non Homestead Operating Rate	(H) Est. NH Operating Tax Dollars	(I) Total Debt / Sinking Fund / Bldg Site Rate	(J) Est. Debt / Sinking Fund / Bldg Site Tax Dollars	(K) Total Recreational Rate	(L) Est. Recreational Tax Dollars	(M) Total Est. Local K12 School Tax Dollars
*Columns (B), (C) and (D) Exclude Renaissance Zone Taxable Value.												
BARK RIVER HARRIS	$67,413,740	$19,974,731	$641,726	0.0000	$ -	17.0374	$ 343,550.11	2.6000	$ 175,275.72	0.0000	$ -	$ 518,825.84
CARNEY NADEAU	$44,011,765	$16,007,689	$98,823	0.0000	$ -	17.5366	$ 281,267.58	3.5000	$ 154,041.18	0.0000	$ -	$ 435,308.76
MENOMINEE	$310,771,061	$114,458,155	$8,512,865	0.0000	$ -	17.3547	$ 2,031,970.78	2.5000	$ 776,927.65	0.0000	$ -	$ 2,808,898.43
NORTH CENTRAL	$73,921,420	$29,453,713	$1,129,797	0.0000	$ -	18.0000	$ 536,945.62	1.3500	$ 99,793.92	0.0000	$ -	$ 636,739.53
NORWAY VULCAN	$12,440,532	$6,527,508	$16,919	0.0000	$ -	17.9622	$ 117,349.28	7.4300	$ 92,433.15	0.0000	$ -	$ 209,782.43
STEPHENSON	$196,774,223	$87,835,561	$875,697	0.0000	$ -	18.0000	$ 1,586,294.28	2.2800	$ 448,645.23	0.0000	$ -	$ 2,034,939.51

Statement Showing Mills Apportioned by the County Board of Commissioners of the County of MENOMINEE for the Year 2011

(A) Community College Name	(B) Taxable Value*	(C) Total Operating Rate	(D) Est. Community College Oper. Tax Dollars	(E) Total Debt Rate	(F) Est. Community College Debt Tax Dollars	(G) Est. Total Community College Tax Dollars

*Columns (B) and (I) Exclude Renaissance Zone Taxable Value

(H) Intermediate School District Name	(I) Taxable Value*	(J) ISD Allocated Rate	(K) Est. ISD Allocated Tax Dollars	(L) ISD Total EV Operating Rate	(M) Est. ISD EV Operating (Spec Ed/Voc/Enh) Tax Dollars	(N) ISD Total Debt Rate	(O) Est. ISD Debt Tax Dollars	(P) Est. Total ISD Tax Dollars
DELTA-SCHOOLCRAFT		0.1346	$ -	2.2505	$ -	0.0000	$ -	$ -
DICKINSON-IRON		0.1671	$ -	1.9653	$ -	0.0000	$ -	$ -
MENOMINEE		2.2437	$ -	0.0000	$ -	0.0000	$ -	$ -

Statement Showing Mills Apportioned by the County Board of Commissioners of the County of MENOMINEE for the Year 2011

Authorities

(A) Authority (Dist. Libraries, DDAs, Transit, Metro, Fire, etc.)	(B) Taxable Value*	(C) Total Operating Rate	(D) Est. Authority Oper. Tax Dollars	(E) Total Debt Rate	(F) Est. Authority Debt Tax Dollars	(G) Est. Total Authority Tax Dollars	(BB) RenZone Taxable Value
C-MENOMINEE DDA	$5,423,722	1.7734	$ 9,618.43	0.0000	$ -	$ 9,618.43	
C-STEPHENSON DDA	$5,259,910	1.0000	$ 5,259.91	0.0000	$ -	$ 5,259.91	

Certification Statement

I hereby certify that this Statement Showing Mills Apportioned by the County Board of Commissioners and submitted to the State Tax Commission is a true statement of all ad valorem millages apportioned by the County Board of Commissioners of the

County of _____ ***for the year*** _____

_____
Signature of County Equalization Director

NOTARIZATION

_____ *Notary Public*

_____ *County, Michigan*

STATE OF MICHIGAN

County of _____ } ss

Subscribed before me this _____

Day of _____ *year* _____

My commission expires _____ , _____

MENOMINEE COUNTY BOARD OF COMMISSIONERS
AGENDA ITEM

SUBJECT:	**Miscellaneous Bills**
DEPARTMENT:	**Administration**
ATTACHMENTS:	**Yes**

SUMMARY:

Board to review recently submitted Miscellaneous Bills as paid on October 27 & Nov. 2, 2011 in the amount of $162,090.39.

RECOMMENDED MOTION

To approve Miscellaneous Bills as paid on October 27 & Nov. 2, 2011 in the amount of $162,090.39.

Submitted by: Brian Bousley **11/17/2011**
Date

WORKSHOP ACTION

	Forwarded to County Board for Approval as Recommended
	Reviewed with no motion to carry forward
	Continue after additional review/research is obtained
	Recommended with the following change(s):

COUNTY BOARD ACTION **DATE:**

	Approved
	Disapproved
	Approved with the following change(s):

General Fund Expenditures

101-101 Board of Commissioners
101-103 Other Legislative
101-131 Circuit/Family Court
~~101-132 Family Court~~
101-136 District Court
101-141 Friend of Court
101-148 Probate Court
101-150 Jury Commission
101-172 County Administrator
101-192 Board of Canvassers
101-211 Legal
101-215 County Clerk
101-253 County Treasurer
101-257 Equalization
101-261 MSU Extension
101-262 Elections
101-265 Courthouse Grounds
101-267 Prosecuting Attorney
101-268 Register of Deeds
101-275 Drain Commissioner
101-301 Sheriff Department
101-331 Marine Law
101-332 Snowmobile Law
101-334 Off-Road Recreational Vehicle
101-335 ATV Education
101-401 Planning Commission
101-426 Emergency Management
101-526 Waste Management
101-601 Health & Welfare
101-635 B&G/Hospital Operation
101-648 Medical Examiner
101-681 Vets Burial & Relief
101-682 Veterans Affairs
101-728 Economic Development
101-997 Appropriations
101-999 Operating Transfers

Special Revenue Funds

205 Road Patrol
208 County Parks
215 Friend of Court
~~220 Park Improvements~~
243 Remonumentation
249 Building Code
256 ROD - Automation Fund
264 Local Corrections Officers Training
265 Drug Law Enforcement Forfeiture
266 E911
269 Law Library
271 County Library
272 CDBG - Wells Fargo Grant
274 CDBG - County
276 CERT-Citzns Emerg. Response Team
277 LEPC
280 Inmate Canteen fund
281 K-9
282 Justice Training
284 Revenue Sharing
285 Senior Citizens
292 Child Care
294 Veterans' Trust
296 Special Child Care Funds

516 DTRF-Delinquent Tax Revolving Fund
517 DTRF-PA 123 Foreclosure

MENOMINEE COUNTY
Claims Audit Report

APPROVED
OCT 28
CHIEF FISCAL OFFICER
MENOMINEE COUNTY MICHIGAN

Vendor Name / Vcher#	Voucher Date	Vendor's Ref#	Description	Debit Accnt#	$Amount	SepCk	Claim Total
Bank Account: General							
ACFSA							
20530	10/11/2011	16002	2012 Dues	101-301-770.00	79.00		$79.00
Adams, Mercedes							
20580	10/26/2011	Per Diem	Jury Commission - 10/26/11	101-150-710.00	50.00		$55.55
20581	10/26/2011	Reimbursement	Jury Commission - Mileage 10/26/11	101-150-860.00	5.55		
AIRGAS NORTH CENTRAL							
20556	10/12/2011	105823578	Oxygen (x2)	205-315-755.00	8.66		$8.66
Anderson, Bill							
20634	10/24/2011	Reimbursement	Planning Commision Mileage	101-401-710.00	24.42		$24.42
ANGELIS MENOMINEE INC							
20535	9/6/2011	0502211-IN	Inmate Groceries	101-301-770.00	83.76		$384.95
20536	9/14/2011	0386211-IN	Inmate Groceries	101-301-770.00	49.67		
20537	9/19/2011	1303211-IN	Inmate Groceries	101-301-770.00	82.10		
20538	9/22/2011	1657211-IN	Inmate Groceries	101-301-770.00	55.63		
20539	9/27/2011	1535211-IN	Inmate Groceries	101-301-770.00	113.79		
APCO INTERNATIONAL							
20627	10/12/2011	89102	2012 Membership Dues	266-325-802.00	92.00		$92.00
Bailey Park Fishing Museum							
20655	10/27/2011	Appropriation	Annual Appropriation for November 1, 2	101-997-999.25	1,000.00		$1,000.00
BAY AREA MEDICAL CENTER							
20611	9/30/2011	MENCTY	Pre Employment Physical - Regina Mist	101-172-801.01	113.00		$113.00
BAYSHORE VETERINARY CLINIC							
20547	10/12/2011	143461	Gracie - Medication	101-301-881.01	38.51		$124.71
20548	10/19/2011	143693	Gracie - Food & Vaccines	101-301-881.01	86.20		
BP							
20553	10/5/2011	31708421	Gasoline Charges	205-315-742.00	614.03		$614.03
Cedar River Plaza							
20616	9/30/2011	Mem 9-30	Fuel Purchases from 8/1 - 9/30/2011	208-751-742.00	78.59		$78.59
Cellcom Wisconsin RSA 04							
20608	10/5/2011	464771	Cellular Services	101-132-850.00	20.01		$177.17
20608	10/5/2011	464771	Cellular Services	296-664-850.00	51.21		
20608	10/5/2011	464771	Cellular Services	296-665-850.00	13.94		
20617	10/5/2011	471379	Medical Examiner - Cellular Services	101-648-727.00	92.01	x	
CLOVERLAND PAPER CO							
20529	10/14/2011	96731	Bleach, Lysol, Paper Cups	101-301-770.00	56.27		$704.55
20568	10/21/2011	96799	Courthouse - Liners, Toilet Tissue, Mop	101-265-755.01	293.52		
20569	10/21/2011	96800	Library - Bowl Cleaners & Tissue	101-265-755.01	66.57		
20614	10/14/2011	96730	Courthouse - Toilet Tissue, Tissues, Ly	101-265-755.01	227.45		
20615	10/14/2011	96732	Library - Multifold Towels	101-265-755.01	60.74		
Cory's Auto Salvage							
20586	10/24/2011	36694	Tires (x4)	208-751-984.00	200.00		$200.00
D&S Construction							
20602	10/18/2011	Scott	Gutters & Mechanical Upgrade	274-690-809.59	2,026.00		$2,026.00
Data Consultants, Inc.							
20531	10/10/2011	1000001405	1 yr svc for the jail video surveillance eq	101-301-770.00	500.00		$500.00

APPROVED
OCT 28
CHIEF FISCAL OFFICER
MENOMINEE COUNTY, MICHIGAN

Vendor Name / Vcher#	Voucher Date	Vendor's Ref#	Description	Debit Accnt#	$Amount	SepCk	Claim Total
Bank Account: General							
DataSpec, LLC							
20645	10/26/2011	1408	Veterans' Svcs Software (Set up & Yea	101-682-970.00	998.00		$998.00
Disabled American Veterans							
20651	10/27/2011	Appropriation	Annual Appropriation for November 1, 2	101-997-999.28	2,614.00		$2,614.00
Dreamscape Communications							
20620	9/20/2011	w1779	2 months - Wireless Internet - Annex	101-261-850.00	139.98		$139.98
Durocher, Tony							
20603	10/17/2011	Reimbursement	Meals & Mileage 10/3/2011	101-132-801.00	78.02		$114.95
20604	10/17/2011	4650	Transport of Juvenile (A.E.)	101-132-801.01	10.93		
20604	10/17/2011	4650	Transport of Juvenile (A.E.)	101-132-801.00	26.00		
ERICKSON WAYNE							
20630	10/24/2011	Reimbursement	Planning Commission - Mileage	101-401-710.00	16.65		$16.65
FAITHORN RESCUE SQUAD							
20654	10/27/2011	Appropriation	Annual Appropriation for November 1, 2	101-997-999.05	1,000.00		$1,000.00
FASTENAL							
20613	10/7/2011	WIMAR115448	Building & Ground Supplies	101-265-755.00	23.96		$23.96
FRIEND OF COURT							
20570	10/24/2011	Entry of Lein	to Register of Deeds (Erickson Lein on I	101-141-803.00	26.00		$26.00
Galls, An Aramark Company							
20555	9/28/2011	511654236	Ez Adj Cp Holster	205-315-745.00	29.48		$29.48
Good Source							
20534	10/13/2011	S10265343	Inmate Groceries	101-301-770.00	975.31		$975.31
Governmental Products LLC							
20637	10/20/2011	2607	2 Part Receipt Book (x1000)	101-253-727.00	196.00		$196.00
GREAT AMERICAN DISPOSAL CO THE							
20609	10/1/2011	19100145	Shakey & Kleinke - Trash Removal	208-751-942.00	807.29		$807.29
Harding Portables, LLC							
20612	10/3/2011	3492	Monthly Rental 9/7/11 - 10/6/2011	208-751-801.00	80.00		$80.00
Hasse, Jean							
20660	10/26/2011	Reimbursement	Meal - CAD System Admin Trng	266-325-860.00	9.21		$9.21
HERRILD, RENEE							
20624	10/14/2011	Reimbursement	Mileage & Meals - FOC Conference in M	101-141-860.00	172.60		$172.60
ID NETWORKS							
20520	10/1/2011	165607	PO# 02582 Annual Svc Maintenance Fe	101-301-770.00	4,495.00		$4,495.00
IXL Historical Museum							
20656	10/27/2011	Appropriation	Annual Appropriation for November 1, 2	101-997-999.21	1,000.00		$1,000.00
J S ELECTRONICS, INC.							
20659	10/26/2011	16791	City EMS for Paging & Communications	266-325-934.01	70.00		$70.00
Joel Hensley, RN							
20546	10/21/2011	Nursing Services	August 27 - September 10 2011	101-301-770.01	1,365.00		$1,365.00
Kewley, Diane							
20606	10/17/2011	4652	Saturday Detention (B.M.)	101-132-801.01	88.00		$88.00

Vendor Name / Vcher#	Voucher Date	Vendor's Ref#	Description	Debit Accnt#	$Amount	SepCk	Claim Total
Bank Account: General							
Manpower							
20598	10/23/2011	23088153	Week Ending 10/23//2011 - Regina Mis	101-141-704.00	590.00		$1,648.31
20623	10/9/2011	23008719	Week Ending 10/9/11 - Regina Mistark	101-141-704.00	468.31		
20647	10/16/2011	23052219	Week Ending 10/16//2011 - Regina Mis	101-141-704.00	590.00		
Marinette Farm & Garden							
20549	10/12/2011	174988	Dog Food	101-301-881.01	55.22		$55.22

APPROVED
OCT 28 2011
CHIEF FISCAL OFFICER
MENOMINEE COUNTY MICHIGAN

APPROVED
OCT 28
CHIEF FISCAL OFFICER
MENOMINEE COUNTY MICHIGAN

Bank Account: General

Vendor Name / Vcher#	Voucher Date	Vendor's Ref#	Description	Debit Accnt#	$Amount	SepCk	Claim Total
Mastercard							$4,916.65
20559	10/12/2011	Credit Card	Nite Lite	101-301-881.00	217.98	x	
20559	10/12/2011	Credit Card	Holiday	101-301-860.00	49.39	x	
20559	10/12/2011	Credit Card	Shell Oil	101-301-860.00	51.49	x	
20559	10/12/2011	Credit Card	Shell Oil	205-315-860.00	81.59	x	
20559	10/12/2011	Credit Card	Marathon	205-315-860.00	56.80	x	
20559	10/12/2011	Credit Card	Marathon	205-315-860.00	27.76	x	
20559	10/12/2011	Credit Card	Bay Harbor Village Htl	101-301-860.00	120.29	x	
20559	10/12/2011	Credit Card	Little Caesars	101-301-770.00	54.06	x	
20559	10/12/2011	Credit Card	McDonald's	101-301-770.00	82.68	x	
20559	10/12/2011	Credit Card	BloomsToday	101-301-755.00	57.73	x	
20559	10/12/2011	Credit Card	Holiday	101-301-860.00	34.19	x	
20559	10/12/2011	Credit Card	Meijer	101-301-860.00	54.01	x	
20559	10/12/2011	Credit Card	Uno's Chicago Grill	101-301-860.00	36.04	x	
20559	10/12/2011	Credit Card	Nite Lite	101-301-881.00	329.93	x	
20559	10/12/2011	Credit Card	Exxon Mobile	101-301-860.00	34.00	x	
20559	10/12/2011	Credit Card	Holiday	101-301-860.00	42.01	x	
20559	10/12/2011	Credit Card	Holiday Inn Express	101-301-860.00	147.00	x	
20559	10/12/2011	Credit Card	Holiday Inn Express	101-301-860.00	155.40	x	
20559	10/12/2011	Credit Card	Shell Oil	282-302-881.00	28.38	x	
20559	10/12/2011	Credit Card	Shell Oil	282-302-881.00	14.60	x	
20559	10/12/2011	Credit Card	Ramada Inn of Marquette	205-315-860.00	137.80	x	
20559	10/12/2011	Credit Card	Marathon	282-302-881.00	23.55	x	
20559	10/12/2011	Credit Card	Shell Oil	282-302-881.00	39.61	x	
20559	10/12/2011	Credit Card	Clarion Hotel	282-302-881.00	168.90	x	
20559	10/12/2011	Credit Card	Nite Lite	101-301-881.00	34.99	x	
20559	10/12/2011	Credit Card	Hudson's Classic	101-301-860.00	59.29	x	
20559	10/12/2011	Credit Card	Intelius SB	101-301-755.00	19.95	x	
20559	10/12/2011	Credit Card	Jaxx Snaxx	101-301-860.00	36.02	x	
20559	10/12/2011	Credit Card	St. Ignace EZ Mart	101-301-860.00	37.80	x	
20559	10/12/2011	Credit Card	ExxonMobil	101-301-860.00	50.00	x	
20559	10/12/2011	Credit Card	Credit Voucher - Holiday Inn Express	101-301-860.00	-8.40	x	
20584	10/12/2011	Credit Card	Cedar River Plaza	101-682-860.00	77.57		
20584	10/12/2011	Credit Card	Econo Lodge	277-426-955.00	108.00		
20584	10/12/2011	Credit Card	Shell Oil	256-277-860.00	77.57		
20584	10/12/2011	Credit Card	Nonna Lisa's	256-277-860.00	17.98		
20584	10/12/2011	Credit Card	Burger King	256-277-860.00	9.52		
20584	10/12/2011	Credit Card	Big Boy	256-277-860.00	10.85		
20584	10/12/2011	Credit Card	Clarion Hotel	101-268-860.00	160.92		
20584	10/12/2011	Credit Card	Patrick Sinclair	256-277-860.00	14.56		
20584	10/12/2011	Credit Card	City Park Grill	256-277-860.00	17.50		
20584	10/12/2011	Credit Card	Grand Trav Resort	101-101-859.00	270.90		
20584	10/12/2011	Credit Card	Grand Trav Resort	101-101-859.00	270.90		
20584	10/12/2011	Credit Card	Apple Tree Inn of Peto	101-268-860.00	267.00		
20584	10/12/2011	Credit Card	Burger King	256-277-860.00	14.07		
20584	10/12/2011	Credit Card	Bayshore Resort	101-148-860.00	166.50		
20584	10/12/2011	Credit Card	Rapid River Mini Mart	256-277-860.00	73.87		
20585	10/12/2011	Credit Card	Hamilton Inn	296-664-860.00	117.72		
20585	10/12/2011	Credit Card	Island Hotel	101-101-859.00	70.85		
20585	10/12/2011	Credit Card	Island Hotel	101-101-859.00	70.85		
20585	10/12/2011	Credit Card	The Buck Inn	101-141-860.00	36.55		
20585	10/12/2011	Credit Card	Boyne Highlands	101-141-860.00	262.71		
20585	10/12/2011	Credit Card	Boyne Highlands	101-141-860.00	262.71		
20585	10/12/2011	Credit Card	Boyne Highlands	101-141-860.00	262.71		

APPROVED
OCT 28
CHIEF FISCAL OFFICER
MENOMINEE COUNTY MICHIGAN

Vendor Name / Vcher#	Voucher Date	Vendor's Ref#	Description	Debit Accnt#	$Amount	SepCk	Claim Total
Bank Account: General							
MATHIEU MARYE							$50.84
20582	10/26/2011	Per Diem	Jury Commission - 10/26/11	101-150-710.00	50.00		
20583	10/26/2011	Reimbursement	Jury Commission Mileage - 10/26/11	101-150-860.00	0.84		
Menards - Marinette							$196.87
20593	10/17/2011	80960	Outlet & Shoplt (x8)	101-265-755.00	113.29		
20594	10/18/2011	81097	Exit Light, Bucket, Stops Rust (x2)	101-265-755.00	103.57		
20595	10/18/2011	81262	Credit - Return of Mop Bucket	101-265-755.00	-19.99		
MENOMINEE ANIMAL SHELTER							$1,000.00
20652	10/27/2011	Appropriation	Annual Appropriation for November 1, 2	101-997-999.27	1,000.00		
MENOMINEE CONSERVATION DISTRIC							$3,000.00
20650	10/27/2011	Appropriation	Annual Appropriation for November 1, 2	101-997-999.29	3,000.00		
Menominee County Historical							$3,000.00
20657	10/27/2011	Appropriation	Annual Appropriation for November 1, 2	101-997-999.06	3,000.00		
MICHIGAN ELECTION RESOURCES							$467.01
20638	10/21/2011	27490	Precint Supply Kit - November 2011 Ele	101-262-727.00	467.01		
MICHIGAN STATE INDUSTRIES							$172.97
20533	9/29/2011	1229 9234	Detergent & Tableware	101-301-770.00	172.97		
MID-COUNTY RESCUE SQUAD							$1,000.00
20653	10/27/2011	Appropriation	Yearly Appropriation for November 1, 2(	101-997-999.05	1,000.00		
MILLERS ACTION OFFICE SUPPLY I							$887.33
20591	10/20/2011	081117	Clerk's Copier Maintenance	101-215-931.00	39.90		
20599	10/20/2011	081099	Fax Machine Drum for Clerk's Office	101-215-727.00	117.99		
20625	10/13/2011	080933	Clerk's Office Fax Machine Toner	101-215-727.00	130.98		
20629	10/17/2011	080941I	District Court - Staple Remover	101-136-727.00	11.49		
20658	10/25/2011	081194	Recorder/Docking Station & Transcribei	101-131-727.00	586.97		
Mountain Engineering, Inc.							$276.25
20600	10/12/2011	111006	Inspection of Hermansville Hotel	517-252-970.000	276.25		
New North, Inc.							$50.00
20618	10/25/2011	Registration	Brian Bousley - New North Summit 201'	101-172-802.00	50.00		
NKS Tire & Service, Inc.							$686.35
20551	10/20/2011	79334	07 Chevy Silverado - Tires & Valve Ster	101-301-981.00	686.35		
NMU Financial Services							$140.00
20557	10/12/2011	mecosh-49	MI Speed Measurement Enforcement T	205-315-881.03	140.00		
Office Depot, Inc.							$173.14
20575	10/12/2011	582592750001	Annex - DVDR, HP Ink, CD/DVD Sleev(	101-261-727.00	29.24		
20575	10/12/2011	582592750001	Annex - DVDR, HP Ink, CD/DVD Sleev(	101-261-752.00	40.90		
20576	10/12/2011	582592649001	Annex - USB Drive	101-261-727.00	35.96		
20577	10/12/2011	582592752001	Annex - Planner	101-261-727.00	9.99		
20578	10/12/2011	582592751001	Annex - Envelopes	101-261-727.00	27.88		
20587	10/11/2011	582480976001	District Court - Highlighter, Duster, Pape	101-136-727.00	29.17		
PAAM							$1,986.00
20592	10/17/2011	Dues & Fee	2012 Dues & PACC/PAAM Licensing/S	101-267-802.00	1,986.00		
Pan-O-Gold Baking Co.							$180.25
20540	10/4/2011	00040683127703	Inmate Groceries	101-301-770.00	58.45		
20541	10/11/2011	00040683128404	Inmate Groceries	101-301-770.00	53.55		
20542	9/27/2011	00040683127002	Inmate Groceries	101-301-770.00	68.25		

MENOMINEE COUNTY
Claims Audit Report

Vendor Name / Vcher#	Voucher Date	Vendor's Ref#	Description	Debit Accnt#	$Amount	SepCk	Claim Total
Bank Account: General							
Peterson, Charlene							$18.87
20631	10/24/2011	Reimbursement	Planning Commission - Mileage	101-401-710.00	18.87		
PrintersPlus!							$360.00
20635	10/19/2011	11028	4 Part Carbonless Forms & Window En	101-136-727.00	360.00		
Pro-Tec Home Inspections							$495.00
20596	10/20/2011	Desotell	Lead Risk Assessment	274-690-809.56	495.00		
Quill Corporation							$300.69
20524	10/19/2011	7497465	Letter Tray	101-301-727.00	4.94		
20525	10/19/2011	7483015	DVDR, Counterfiet Detector Pen (x6)	101-301-727.00	46.01		
20532	10/3/2011	7122094	File Folders, Batteries, Storage Box, Sa	101-301-770.00	249.74		
RAINBOW HOUSE THE							$1,500.00
20649	10/27/2011	Appropriation	November 1, 2011	101-997-999.11	1,500.00		
Randall Phillipps							$495.00
20571	10/25/2011	PA11-0106	Forfeiture Bond - James Finch	265-000-655.00	495.00		
REDWOOD TOXICOLOGY LABORATORY							$183.25
20607	10/17/2011	00719820119	Drug Testing Supplies	296-668-835.00	131.00		
20628	9/30/2011	00718420119	Drug Testing	101-136-727.00	52.25		
REGISTER OF DEEDS							$14.00
20579	10/24/2011	Recording Fee	Discharge of Mortgage - Wilkey	274-690-709.09	14.00	x	
Reinhart Foodservice							$967.12
20543	10/11/2011	975114	Inmate Groceries	101-301-770.00	196.04		
20544	10/11/2011	976091	Inmate Groceries	101-301-770.00	690.91		
20545	10/11/2011	976236	Inmate Groceries	101-301-770.00	134.55		
20639	8/2/2011	961770	Inmate Groceries	101-301-770.00	61.64		
20640	8/10/2011	963621	Credit Memo against invoice #958042	101-301-770.00	-27.09		
20641	8/18/2011	965465	Credit Memo against invoice #964621	101-301-770.00	-55.03		
20642	10/18/2011	977641	Credit Memo against invoice #975114	101-301-770.00	-33.90		
Schroud, Margaret							$262.67
20567	10/26/2011	Reimbursement	Mileage - 10/11 & 10/25/2011	101-257-860.00	44.00		
20626	10/17/2011	Reimbursement	Mileage & Meals - Equalization Director	101-257-860.00	218.67		
Schultz, Lillian R.							$23.31
20632	10/24/2011	Reimbursement	Planning Commission - Mileage	101-401-710.00	23.31		
Short, Mary Kay							$19.25
20621	10/6/2011	M11-13758-PH	Transcripts - Koch/Owens	101-131-806.00	19.25		
SPARKS GEOFFERY							$697.50
20644	10/25/2011	03-058-GL	Legal Services (P.G.)	101-148-807.00	697.50		
St. Francis Hospital							$12.00
20572	10/20/2011	6860	Records - [redacted]elease ID 1529	101-267-804.00	7.50		
20573	10/20/2011	6861	Records - [redacted] Release ID 15292	101-267-804.00	4.50		

APPROVED
OCT 28
CHIEF FISCAL OFFICER
MENOMINEE COUNTY MICHIGAN

Vendor Name / Vcher#	Voucher Date	Vendor's Ref#	Description	Debit Accnt#	$Amount	SepCk	Claim Total
Bank Account: General							
Standard Insurance Company							$197.80
20550	10/25/2011	November 2011	Life Insurance	101-101-713.00	11.50		
20550	10/25/2011	November 2011	Life Insurance	101-132-713.00	6.32		
20550	10/25/2011	November 2011	Life Insurance	101-136-713.00	11.50		
20550	10/25/2011	November 2011	Life Insurance	101-141-713.00	9.20		
20550	10/25/2011	November 2011	Life Insurance	101-148-713.00	0.58		
20550	10/25/2011	November 2011	Life Insurance	101-215-713.00	11.50		
20550	10/25/2011	November 2011	Life Insurance	101-172-713.00	4.60		
20550	10/25/2011	November 2011	Life Insurance	101-261-713.00	2.30		
20550	10/25/2011	November 2011	Life Insurance	101-267-713.00	9.20		
20550	10/25/2011	November 2011	Life Insurance	101-268-713.00	2.30		
20550	10/25/2011	November 2011	Life Insurance	101-253-713.00	6.90		
20550	10/25/2011	November 2011	Life Insurance	101-257-713.00	4.60		
20550	10/25/2011	November 2011	Life Insurance	101-265-713.00	2.30		
20550	10/25/2011	November 2011	Life Insurance	101-301-713.00	46.00		
20550	10/25/2011	November 2011	Life Insurance	101-682-713.00	2.30		
20550	10/25/2011	November 2011	Life Insurance	101-103-713.00	4.60		
20550	10/25/2011	November 2011	Life Insurance	101-426-713.00	1.15		
20550	10/25/2011	November 2011	Life Insurance	271-790-713.00	9.20		
20550	10/25/2011	November 2011	Life Insurance	296-663-713.00	2.30		
20550	10/25/2011	November 2011	Life Insurance	296-664-713.00	2.30		
20550	10/25/2011	November 2011	Life Insurance	296-665-713.00	2.30		
20550	10/25/2011	November 2011	Life Insurance	208-751-713.00	4.60		
20550	10/25/2011	November 2011	Life Insurance	205-316-713.00	2.30		
20550	10/25/2011	November 2011	Life Insurance	205-315-713.00	20.70		
20550	10/25/2011	November 2011	Life Insurance	266-325-713.00	14.95		
20550	10/25/2011	November 2011	Life Insurance	266-326-713.00	2.30		
STATE BAR OF MICHIGAN							$315.00
20619	10/18/2011	Dues	Assistant Prosecuter - William Merkel	101-267-802.00	315.00		
State of Michigan - Dept. of Management & Budget							$2,700.00
20523	5/10/2011	MPSCS-11928	PO# 02580 - Radio Subscription Fees	205-315-934.01	2,700.00	x	
State of Michigan - MI Supreme Court Finance							$5,839.95
20636	10/17/2011	D95A 1530-02	Software Support Fee & LEIN fee Oct -	101-136-931.01	3,337.76	x	
20643	10/17/2011	P55 1530-04	Software Support Fee (Oct - Dec 2011)	101-132-858.03	2,502.19	x	
State of Michigan - Michigan State Police							$3,500.00
20521	8/23/2011	551-359352	PO# 02581 T1 Line, 3 way 4/1 - 6/30/20	101-301-934.01	1,750.00	x	
20522	9/27/2011	551-362037	PO# 02581 T1 Line, 3 way 7/1 - 9/30/11	101-301-934.01	1,750.00	x	
STEPHENSON MARKETING COOPERATI							$1,621.27
20554	9/30/2011	015579	September 2011 Gasoline Charges	205-315-742.00	1,621.27		
Success Commuinications, Inc.							$1,554.00
20646	10/19/2011	1755	PO# 02578 - Telecommunicator Trainin	266-326-881.00	1,554.00		

APPROVED
OCT 2 8
CHIEF FISCAL OFFICER
MENOMINEE COUNTY MICHIGAN

Vendor Name / Vcher#	Voucher Date	Vendor's Ref#	Description	Debit Accnt#	$Amount	SepCk	Claim Total
Bank Account: General							
Tire Trax							$1,424.56
20504	10/5/2011	2643	Impala - Oil Change & Filter, AntiFreeze	205-315-934.02	35.00		
20505	8/15/2011	2589	Impala - Oil Change & Filter, Wire	205-315-934.02	55.00		
20506	7/6/2011	2829	Chevy Truck - Oil Change, Filter, Greas	205-315-934.02	35.00		
20507	7/26/2011	2878	Impala - Oil Change, Filter, Tire Rotatio	205-315-934.02	35.00		
20508	8/15/2011	2964	Van - Oil & Filter, Right Lamp Bulb	205-315-934.02	35.00		
20509	8/4/2011	2934	Impala - Oil & Filter, Tire Rotation	205-315-934.02	35.00		
20510	8/22/2011	2985	Dodge Durango - Windshield Glass, Oil	205-315-934.02	298.58		
20511	8/16/2011	2971	Impala - Oil & Filter	205-315-934.02	35.00		
20512	9/7/2011	2551	Impala - Oil & Filter	205-315-934.02	35.00		
20513	9/6/2011	2512	Impala - Rotate/Balance & Oil/Filter	205-315-934.02	35.00		
20514	9/1/2011	2559	Truck - Oil & Filter	205-315-934.02	35.00		
20515	9/7/2011	2573	Impala - Oil/Filter & Tire Rotation	205-315-934.02	35.00		
20516	9/15/2011	2583	Impala - Oil/Filter & Tire Rotation	205-315-934.02	35.00		
20517	9/15/2011	2582	Impala - Oil/Filter & Tire Rotation	205-315-934.02	35.00		
20518	6/30/2011	2820	Impala - Rotate, Oil/Filter, Battery	205-315-934.02	143.00		
20519	9/21/2011	2600	Tahoe - Oil/Filter, Brakes	205-315-934.02	507.98		
TWIN COUNTY AIRPORT COMMISSION							$2,000.00
20648	10/27/2011	Appropriations	Capital Outlay for November 1, 2011	101-997-999.02	2,000.00		
U.E.S. COMPUTERS, INC.							$2,547.00
20527	10/18/2011	33766	Set up new work station - Nast	101-301-755.00	185.00		
20528	10/18/2011	33918	Set up new work station - Carol Rye	101-301-755.00	185.00		
20552	10/3/2011	57776	Workstation for Carol Rye	101-301-998.00	735.00		
20574	10/20/2011	58006	Think Pad - Veteran's Svcs	101-682-970.00	555.00		
20588	10/20/2011	58008	Workstation for District Court	101-103-857.00	762.00		
20610	10/13/2011	33974	Maintenance on Carol Johnson's Comp	101-103-857.00	125.00		
UPCAP SERVICES INC							$39.36
20601	9/30/2011	1354	Work Crew Services	517-252-931.00	39.36		
US Bancorp Equip Finance Inc.							$66.76
20526	10/14/2011	188310478	Konica	101-301-727.00	66.76		
VanEyck, Stephen							$34.50
20605	10/17/2011	4651	Transport of Juvenile (A.E.)	101-132-801.01	10.50		
20605	10/17/2011	4651	Transport of Juvenile (A.E.)	101-132-801.00	24.00		
WALL LARRY							$2,363.00
20597	10/20/2011	Chartre	Administrative services	274-690-709.09	2,363.00		
Warren Suchovsky							$9.99
20633	10/24/2011	Reimbursement	Planning Commission - Mileage	101-401-710.00	9.99		
WEST GROUP PAYMENT CENTER							$385.65
20622	9/30/2011	823624838	September 1, 2011 - September 30, 20	269-145-801.00	385.65		
WISCONSIN PUBLIC SERVICE CORP - P O BOX 19003							$468.32
20589	10/18/2011	0402047856-00008	Kleinke Park	208-751-920.01	382.47		
20590	10/18/2011	0402047856-00005	Kleinke Park	208-751-920.01	85.85		
tal Amount for Bank Account: General							$70,707.07

APPROVED
OCT 28
COUNTY CLERK
MENOMINEE COUNTY, MICHIGAN

MENOMINEE COUNTY
Claims Audit Report

Vendor Name / Vcher#	Voucher Date	Vendor's Ref#	Description	Debit Accnt#	$Amount	SepCk	Claim Total
Bank Account: General							
Blue Cross Blue Shield of MI							
20717	10/25/2011	December 2011	400 $49552.07, 401 $1324.98, 45478 $	101-103-712.00	52,525.88		$91,383.32
20717	10/25/2011	December 2011	400 $49552.07, 401 $1324.98, 45478 $	205-315-712.00	13,503.12		
20717	10/25/2011	December 2011	400 $49552.07, 401 $1324.98, 45478 $	205-316-712.00	1,639.51		
20717	10/25/2011	December 2011	400 $49552.07, 401 $1324.98, 45478 $	208-751-712.00	2,732.51		
20717	10/25/2011	December 2011	400 $49552.07, 401 $1324.98, 45478 $	266-325-712.00	1,566.10		
20717	10/25/2011	December 2011	400 $49552.07, 401 $1324.98, 45478 $	266-326-712.00	1,066.77		
20717	10/25/2011	December 2011	400 $49552.07, 401 $1324.98, 45478 $	271-790-712.00	-15,484.34		
20717	10/25/2011	December 2011	400 $49552.07, 401 $1324.98, 45478 $	271-790-712.00	14,391.86		
20717	10/25/2011	December 2011	400 $49552.07, 401 $1324.98, 45478 $	296-663-712.00	1,639.51		
20717	10/25/2011	December 2011	Retirees	701-000-231.10	1,324.98		
20717	10/25/2011	December 2011	Airport	701-000-231.10	2,049.38		
20717	10/25/2011	December 2011	400 $49552.07, 401 $1324.98, 45478 $	704-000-232.00	8,743.11		
20717	10/25/2011	December 2011	Brian Neumier	701-000-231.10	759.03		
20717	10/25/2011	December 2011	Lynn Somero	701-000-231.10	759.03		
20718	10/25/2011	December 2011	08286-400	101-103-712.00	4,166.87		
Total Amount for Bank Account: General							$91,383.32

APPROVED
NOV - 3 2011
CHIEF FISCAL OFFICER
MENOMINEE COUNTY MICHIGAN
RB

MENOMINEE COUNTY BOARD OF COMMISSIONERS
AGENDA ITEM

SUBJECT:	**Commissioner Per Diems and Expenses**
DEPARTMENT:	**Administration**
ATTACHMENTS:	**yes**

SUMMARY:

Board to review Commissioner per diems and expenses as recently submitted for payment

RECOMMENDED MOTION

To approve Commissioner per diems and expenses as recently submitted for payment

Submitted by: Brian Bousley **11/17/2011**
Date

WORKSHOP ACTION

	Forwarded to County Board for Approval as Recommended
	Reviewed with no motion to carry forward
	Continue after additional review/research is obtained
	Recommended with the following change(s):

COUNTY BOARD ACTION **DATE:**

	Approved
	Disapproved
	Approved with the following change(s):

MENOMINEE COUNTY
BOARD OF COMMISSIONERS
REIMBURSEMENT VOUCHER

RECEIVED
11/3/11
Menominee County Administrator
COPY

Mileage: $~~.51~~ .555/mile ~ effective 01 Jan. 2011

*Meals
Breakfast ~ up to $7.50
Lunch ~ up to $10.00
Dinner ~ up to $17.50

*must attach receipt for reimbursement

Name: **Bernie Lang ~ District 1**

Date	Mileage, meals, Bridge Tolls, Lodging, etc.		Account Number	Amount
9.30	UPAAC	55	101-101-860.01	
10-1	UPAAC	55	101-101-860.01	
10-6	MI. WKS!	110	101-101-860.01	
10-11	CO. BD	46	101-101-860.01	
10-11	CAA (FINANCE)	116	101-101-860.01	
10-25	SOC SERV	3	101-101-860.01	
10-25	CO. BD.	46	101-101-860.01	
10-27	M.H. (PERS & BD)	144	101-101-860.01	
10-28	UPCAP (EX COM)	110	101-101-860.01	
			101-101-860.01	
		685	101-101-860.01	
		X .555	101-101-860.01	
	Conference Expenses			
		380.18	101-101-859.00	
			101-101-859.00	
			101-101-859.00	
			101-101-859.00	
			101-101-859.00	
			101-101-859.00	
Total Mileage, Meals, Lodging & Conference Expenses to be reimbursed				380.18

It is hereby certified that the above account is true and correct and that no part of the same has been paid.

B. Lang
Signed

11-03-11
Date

Commissioner Per Diem Expense Form

COPY

RECEIVED 11/3/11 Menominee County Administrator

Name of Commissioner BERNIE LANG

$50.00 per meeting - Reg. or Special County Board meeting (Not more than $100 for unrelated meetings on any one day)
$75.00 MAC or UPACC Conference

Date	Meeting Description & Duration	Meeting Expense
9-30	UPAAC	75.
10-1	UPAAC	75.
10-6	MI. WKS!	50.
10-11	CO. BD.	50.
10-11	CAA (FINANCE)	50.
10-25	SOC. SERV.	50.
10-25	CO. BD.	50.
10-27	M.H. (PERS. & BD.)	50.
10-28	UPCAP (EX. COM.)	50.
		500.
Total Per Diem		500.00

It is hereby certified that the above account is true and correct and that no part of the same has been paid.

Commissioner Signature: B. Lang

Date: 11-03-11

Commissioner Per Diem Expense Form

COPY

RECEIVED
10/26/11
Menominee County Administrator

Name of Commissioner James Furlwy

$50.00 per meeting - Reg. or Special County Board meeting (Not more than $100 for unrelated meetings on any one day)
$75.00 MAC or UPACC Conference

Date	Meeting Description & Duration	Meeting Expense
10-11-11	Menominee Business Development Corp	50.00
10-11-11	County Board	50.00
10-18-11	Library Board	50.00
10-19-11	Airport	50.00
10-24-11	Airport	50.00
10-25-11	County Board	50.00
	Total Per Diem	300.00

It is hereby certified that the above account is true and correct and that no part of the same has been paid.

Commissioner Signature: J. M. Furlwy

Date: 10-26-11

MENOMINEE COUNTY
BOARD OF COMMISSIONERS
REIMBURSEMENT VOUCHER

COPY
RECEIVED
10/26/11
Menominee County Administrator

Mileage: $.51/mile ~ effective 01 Jan. 2011

*Meals
Breakfast ~ up to $7.50
Lunch ~ up to $10.00
Dinner ~ up to $17.50

*must attach receipt for reimbursement

Name: **James Furlong ~ District 2**

Date	Mileage, meals, Bridge Tolls, Lodging, etc.	Account Number	Amount
~~10-11-11~~	~~Menominee Business Development~~	101-101-860.02	~~50.00~~
~~10-11-11~~	~~County Board~~	101-101-860.02	~~50.00~~
10-11-11	Menominee - Stephenson 40 Miles	101-101-860.02	22.20
10-18-11	Menominee - Stephenson 40 Miles	101-101-860.02	22.20
10-25-11	Menominee - Stephenson 40 Miles	101-101-860.02	22.20
		101-101-860.02	
		101-101-860.02	
		101-101-860.02	
		101-101-860.02	
		101-101-860.02	
		101-101-860.02	
		101-101-860.02	
	Conference Expenses		
		101-101-859.00	
		101-101-859.00	
		101-101-859.00	
		101-101-859.00	
		101-101-859.00	
		101-101-859.00	
Total Mileage, Meals, Lodging & Conference Expenses to be reimbursed			66.60

It is hereby certified that the above account is true and correct and that no part of the same has been paid.

J. M. Furlong
Signed

10-26-11
Date

MENOMINEE COUNTY
BOARD OF COMMISSIONERS
REIMBURSEMENT VOUCHER

RECEIVED
1/11/11
Menominee County Administrator

COPY

Mileage: ~~$.51~~ 55.5/mile ~ effective 01 Jan. 2011

*Meals
Breakfast ~ up to $7.50
Lunch ~ up to $10.00
Dinner ~ up to $17.50

*must attach receipt for reimbursement

Name: **Charlie Meintz ~ District 4**

Date	Mileage, meals, Bridge Tolls, Lodging, etc.	Account Number	Amount
10-11	Board meeting 10 miles	101-101-860.04	5.55
10-25	Board Meeting 10 miles	101-101-860.04	5.55
10-27	Pinecrest 40 miles	101-101-860.04	22.20
10-4	Parks & Rec. 10 miles	101-101-860.04	5.55
		101-101-860.04	
		101-101-860.04	
		101-101-860.04	
		101-101-860.04	
		101-101-860.04	
		101-101-860.04	
		101-101-860.04	
		101-101-860.04	
	Conference Expenses		
		101-101-859.00	
		101-101-859.00	
		101-101-859.00	
		101-101-859.00	
		101-101-859.00	
		101-101-859.00	
Total Mileage, Meals, Lodging & Conference Expenses to be reimbursed			38.85

It is hereby certified that the above account is true and correct and that no part of the same has been paid.

Charlie Meintz
Signed

1-1-11
Date

Commissioner Per Diem Expense Form

RECEIVED
11/11/11
Menominee County Administrator

Copy

Name of Commissioner Charlie Meintz

$50.00 per meeting - Reg. or Special County Board meeting (Not more than $100 for unrelated meetings on any one day)
$75.00 MAC or UPACC Conference

Date	Meeting Description & Duration	Meeting Expense
10-11	Board meeting	$50
10-25	Board meeting	$50
10-27	Pinecrest	$50
10-4	Parks & Rec	$50
	Total Per Diem	200.00

It is hereby certified that the above account is true and correct and that no part of the same has been paid.

Commissioner Signature: Charlie Meintz

Date: 11-1-11

MENOMINEE COUNTY BOARD OF COMMISSIONERS
AGENDA ITEM

SUBJECT:	**Miscellaneous Boards/Committees/Commission Reports**
DEPARTMENT:	**Administration**
ATTACHMENTS:	**Yes**

SUMMARY:

Miscellaneous reports discussed at the 11/8/11 County Board meeting

RECOMMENDED MOTION

To approve the miscellaneous reports discussed at the 11/8/11 County Board meeting

Submitted by: Brian Bousley **11/17/2011**
Date

WORKSHOP ACTION

	Forwarded to County Board for Approval as Recommended
	Reviewed with no motion to carry forward
	Continue after additional review/research is obtained
	Recommended with the following change(s):

COUNTY BOARD ACTION **DATE:**

	Approved
	Disapproved
	Approved with the following change(s):

MENOMINEE COUNTY BUILDING CODE DEPARTMENT

S904 US HIGHWAY 41 STEPHENSON, MI 49887
PHONE: 906-753-6343 www.menomineecounty.com FAX:906-753-2200

MONTHLY BUILDING PERMIT REPORT

11/01/2011

PERMIT#	DATE ISSUED	OWNER	ADDRESS	TWP.	PERMIT FEE
P12613-11	10/06/11	THOMSON PAUL & LINDA JO	N7719 Z-1 RD	LAKE TWP.	$151.80
Work : 3.GARAGE		24X40 GARAGE			008-435-008-00
P12612-11	10/06/11	BUSCH RONAE M	N942 HWY M-35	MENOMINEE TWP.	$99.00
Work : 7.DECK/PORCH		REPLACE AN EXISTING DECK (SAME SIZE)			010-401-028-00
P12611-11	10/06/11	ST CYR DONALD & ALBERTA	CO RD 553	HARRIS TWP.	$259.16
Work : 4.MANUFACTURED		INSTALL SINGLE WIDE W/GARAGE			005-034-008-00
P12615-11	10/07/11	REBACZ WALTER	W4098 CO RD 346	INGALLSTON TWP.	$92.28
Work : 3.GARAGE		12X36 ADDITION TO EXISTING GARAGE			007-416-006-00
P12614-11	10/07/11	BENSON ROBERT J	SWAMP RD	SPALDING TWP.	$171.00
Work : 3.GARAGE		30X40 GARAGE			013-334-002-00
P12619-11	10/14/11	RIVER BREEZE ADULT CARE HOME LN	4937 RIVER DR	MELLEN TWP.	$142.20
Work : 3.GARAGE		CARPORT			009-131-005-50
P12618-11	10/14/11	REID CLARK & JOANNE	W8526 BLUM RD 37	FAITHORN TWP.	$84.84
Work : 7.DECK/PORCH		PORCH ADDITION & ENCLOSE EXISTING PORCH			003-228-011-00
P12617-11	10/14/11	NEGRO LESLIE R & MARIETTA L	W5131 41 RD	MEYER TWP.	$87.80
Work : 7.DECK/PORCH		PORCH OVER EXISTING SLAB			011-012-003-00
P12616-11	10/14/11	DELAURELLE MELVIN J & RUTH A	N11741 DELFOSSE LN	HOLMES TWP.	$192.60
Work : 4.MANUFACTURED		INSTALL SINGLE WIDE MOBILE HOME			006-202-012-50
P12622-11	10/21/11	KLOIDA KAREN E TRUST	N1265 RIVER DR	MENOMINEE TWP.	$554.00
Work : 1.NEW DWELLING		NEW HOME W/ATTACHED GARAGE			010-224-004-25
P12621-11	10/21/11	LANE TERRY & KATHY A	N16836 BELLEFEUIL LN	HARRIS TWP.	$223.96
Work : 2.ADDITION		ROOM ADDITION/ ATTACHED GARAGE			005-004-002-00
P12620-11	10/21/11	MARTIN JOHN M & LOUISE A	CO RD G-08	MELLEN TWP.	$170.76
Work : 4.MANUFACTURED		INSTALL SINGLE WIDE			009-122-021-25

P12624-11	10/24/11	COSTELLO REVOCABLE TRUST	N12092 STATE RD W-2	HOLMES TWP.	$151.80
Work : 3.GARAGE		DETTACHED GARAGE		006-332-013-00	
P12625-11	10/26/11	EISENZOPH CAROL	W5918 3.5 LN	MELLEN TWP.	$177.40
Work : 3.GARAGE		32x40 pole building		009-127-013-00	
P12632-11	10/31/11	KELL JANET	N15798 KELL RD G.25	SPALDING TWP.	$93.40
Work : 7.DECK/PORCH		PAVILION		013-213-020-00	
P12631-11	10/31/11	NERAT ALAN R	N3592 HWY 41	MENOMINEE TWP.	$99.48
Work : 2.ADDITION		KITCHEN ADDITON		010-123-012-00	
P12630-11	10/31/11	SCHETTER LARRY J. & WAYNE	O-1 RD	NADEAU TWP.	$310.00
Work : 12.OTHER		GUY WIRE TELECOMMUNICATION FACILITY @ ND-7 7/7 101		012-127-001-00	
P12629-11	10/31/11	LENCA CECILE	N12803 LENCA LN	GOURLEY TWP.	$171.00
Work : 3.GARAGE		30X40 POLE BUILDING		004-030-001-00	
P12627-11	10/31/11	WILDE ALLAN & MARY	W5440 WILLOW RD 3.5	MENOMINEE TWP.	$148.44
Work : 2.ADDITION		ADDITION / GREAT ROOM		010-014-020-00	
P12626-11	10/31/11	VANDERZANDEN DAVID N & SALLY	N1018 HWY M-35	MENOMINEE TWP.	$245.00
Work : 2.ADDITION		REMODEL KITCHEN & LIVING ROOM		010-401-009-00	

Total Permits	**20**
Total Fees	**$3,625.92**

PINECREST BOARD OF TRUSTEES

Date: August 25, 2011	Time: 2:00 p m CST
Presiding: Gerald McCole, Chairperson	Place: Board Room
Recording Secretary: Lois Ball, Executive Secretary	

Present: Gerald Smith, Gladys Elegeert, Elaine Boyne, Gerald McCole, Barbara Oliver, Barbara Thorne, Mary Bradley, Michael Kaufman, Margaret Bastien.

Absent: Richard Mapes, Administrator

Liaison Members Present: Mary Harrington

Leadership Team Members Present: Darlene Smith, Candace Meintz, Sharline Corrigan

Also present: Todd Flath, Wendy Bryant, Amy Lantagne

TOPIC	DISCUSSION	OUTCOME
Call to order	The meeting was called to order by Chairperson McCole at 2:00 p.m.	
Approval of August Agenda	Correction of the September meeting date from September 25 to September 22, 2011	A motion was made by Trustee Smith, supported by Trustee Bastien to accept the

		August Agenda with the correction as noted. Motion carried.
Approval of July Meeting Minutes	The minutes of the July 2011 meeting had been sent to Board Members prior to this meeting for review.	A motion was made by Trustee Elegeert, supported by Trustee Oliver, to accept the July minutes. Motion carried.
Review of Financial Statements	Candace Meintz, CFO, reviewed the Financial Statements for the month of July.	A motion was made by Trustee Bradley, supported by Trustee Boyne, to accept the Financial Statements as presented. Motion carried
Board Action on Manifest of Invoices	The Manifest of Invoices had been sent to Board Members prior to this meeting for review.	A motion was made by Trustee Smith, supported by Trustee Elegeert, to accept the Manifest of Invoices as presented and to pay the bills. Motion carried.
Board Committee Reports	Executive Committee: Chairperson McCole noted that copies of the three policies before the Board had been presented to the Board last month. He asked for a motion to accept the policies as presented.	A motion was made by Trustee Bradley, supported by Trustee Boyne, to accept the policies as presented. Motion carried.
	Bad Debt Write-off. The Board reviewed and discussed the list of write offs for the month.	A motion was made by Trustee Boyne, supported by Trustee Smith, to accept the Bad Debt Write off as listed for August. Motion carried.
	Whispering Pines Committee Meeting: Trustee Bradley reported that there was not a meeting this month and next month's meeting date has been changed to September 29th and during this meeting the Board Members will tour each facility. Trustee McCole reported that the picnic held in Bark River last month was really nice and commended the staff for their hard work to put together such a nice picnic.	
Unfinished and New Business	Report of Quality Assurance Committee: Darlene Smith reported on the August Quality Assurance Meeting.	A motion was made by Trustee Bastien, supported by Trustee Oliver, to accept the

		Quality Assurance Report. Motion carried.
Report on Meetings and Conferences Attended	Chairperson McCole noted that Administrator Mapes had attended the MCSSA/MCMCFC Meeting in Bay City. Trustee Kaufman and Trustee Elegeert reported that they had also attended this meeting and discussed the highlights. Trustee Kaufman reported that the Ellen K. Russell/Michael Miketinac Trust had met that morning. A request from Pinecrest for a special wheelchair had been approved with the money to be taken from the Pinecrest Charitable Trust Account. Darlene Smith, Director of Resident Services, reported that she had attended the Governor's luncheon at the fair. She also attended the monthly Alzheimer's meeting and noted that there is a walk this Saturday at the Senior Center in Escanaba. Our Special Care Unit staff and residents will be attending this walk. She also reported that a State Surveyor had been in this week to review a incident which we had self reported and the facility had no citations from this visit.	A motion was made by Trustee Smith, supported by Trustee Boyne to accept the report of Meetings and Conferences attended as presented. Motion carried.
Dickinson County Fair	Chairperson McCole reminded staff that Mr. Degenaer usually offers free admission to us for our residents to the Dickinson County Fair. Mrs. Smith took note of this and will pass it along to our Activity Staff.	
Administrator's Report	1. Child Care Center: Mrs. Smith stated that we are waiting for the Fire Marshal to give his written approval on the finalization of the plans presented. 2. Employee Relations Coordinator: Chairperson	

	McCole noted that we are still working on finding someone to fill this position. 3. Resident Satisfaction Survey: Chairperson McCole reported that the Resident and Family Surveys have come back and the Administrator will give a report on this next month, but the surveys are very favorable looking.	
Comments from Liaison Members	There were not comments at this time.	
Comments from the Public	Amy Lantagne presented two letters at this time. Each letter from a department concerning their work hours and job duties. The letters were reviewed by the Board.	A motion was made by Trustee Bradley, supported by Trustee Oliver, to accept the letters and to refer them to the Labor/Management Council for action in September. Motion carried.
Adjournment	The meeting adjourned at 2:38 p.m.	A motion to adjourn was made by Trustee Smith, supported by Trustee Oliver. Motion carried.

Gerald Smith, Secretary

Gerald A Smith

Richard Mapes, Administrator

R Mapes

PINECREST
CARING COMMUNITY

PINECREST MEDICAL CARE FACILITY
BOARD OF TRUSTEES MEETING

Date: September 22, 2011	Time: 2:02 PM CST
Presiding: Gerald McCole, Chairperson	Place: Board Room
Recording Secretary: Lois Ball, Executive Secretary	

Board Members Present: Elaine Boyne, Gerald McCole, Barbara Oliver, Barbara Thorne, Mary Bradley, Michael Kaufman and Richard Mapes, Administrator

Board Members Absent: Gerald Smith, Gladys Elegeert and Peg Bastien

Liaison Members Present: none were present

Liaison Members Absent: Mary Harrington, Ann Martin, Charlie Meintz, John Degenaer, Jr.

Leadership Team Members Present: Candace Meintz

Guests: Amy Lantagne, Janet Gagne and Janice Betters

TOPIC	DISCUSSION	OUTCOME
The meeting was called to order at 2:02 p.m. CST		
Approval of Agenda	The Agenda was approved with no additions or deletions.	A motion was made by Trustee Bradley, supported by Trustee Boyne. Motion carried.

Board Action on Minutes of the August 25, 2011 meeting	The minutes had been sent to Board Members prior to this meeting.	A motion was made by Trustee Boyne, supported by Trustee Oliver, to accept the minutes of the August Meeting as present. Motion carried.
Financial Statement for August 2011	The Financial Statement were reviewed by Candace Meintz, CFO Discussion was held concerning the statement, census of the building and marketing.	A motion to approve the Financial Statements as presented was made by Trustee Oliver, supported by Mary Bradley. Motion carried.
Manifest of Invoices	The Manifest of Invoices had been sent to Board Members prior to this meeting.	A motion to approve the Manifest of Invoices and to pay the bills was made by Trustee Kaufman, supported by Trustee Boyne. Motion carried.
	Transportation Policy had been sent to Board Members prior to this meeting. Bad Debt Write Off was reviewed by Board Members.	A motion to approve the policy as presented was made by Trustee Bradley, supported by Trustee Boyne. Motion carried. A motion to approve the Bad Debt write offs as presented was made by Trustee Kaufman, supported by Trustee Bradley. Motion carried.
By-Laws	Changes were reviewed and discussed.	A motion to approve was made by Trustee Boyne, supported by Trustee Oliver. Motion carried
Whispering Pines	The Trustees of the Whispering Pines Committee will tour each home next week and have their Board Meeting afterward.	
Quality Assurance	The report was tabled for the month	
Safety Committee	There was no meeting this month	
Meetings and Conferences	Richard attended the First of the month OSF Advisory Meeting Upcoming Meetings: HCAM Oct 2-4 Richard plans to attend and receive an award for one of our employees who was bestowed a scholarship. On Tuesday he will come back for the employee banquet.	

minutes from Sept. 2011

	Jessica and Richard will attend conference [illegible] :h October 12-13 for adult foster care. Trustee Kaufman reported that there had been a special Meeting of the Ellen K. Russell/Michael Miketinac Trust prior to this meeting to review the statements of the trust and there were no requests made by Pinecrest at this meeting.	
Child Care Center Update	Administrator Mapes handed out drafts of the new drawings of the child care center changes and explained the drawings to the Trustees.	
Employee Relations Coordinator update	Administrator Mapes noted that we have made the decision to not fill this position at Pinecrest. He has suggested that Jessica fill that position and have someone full time, or part time over there. He also noted that Whispering Pines is looking at hiring a consultant to help with the certification for Medicare and Medicare for Great Northern Home Care.	
Resident family satisfaction	Administrator Mapes reviewed the Summary of the satisfaction survey from residents and families.	
Charter Cable	We have some interest in upgrading our cable TV, and internet service We are waiting on a quote from them on a bundled service that would include the phone service	
Board of Trustees Christmas Party	The party will be held December 10th at the Island Resort and Casino.	Invitations will be mailed.
Adjournment	The meeting was adjourned at 2:58 p.m.	A motion was made by Trustee Kaufman, supported by Trustee Bradley. Motion carried.

Gerald Smith, Secretary

Richard Mapes, Administrator

MENOMINEE COUNTY PLANNING COMMISSION

S904 U.S. Highway 41, Stephenson, MI 49887 906-753-2209

MINUTES

October 24, 2011

Call to Order

The Menominee County Planning Commission meeting was called to order at 5:10 pm CDT by Chair Lillian Schultz on October 24, 2011 at the Michigan State University Extension office, in Stephenson, MI with the Pledge of Allegiance.

Roll Call

Present: Bill Anderson; Wayne Erickson; Jim Pearson; Charlene Peterson; Lillian Schultz; Warren Suchovsky. Quorum to vote was present. Absent: Eric Bergh

Public Comment (no public present) – Jim Pearson, County Board Commissioner, spoke about the meeting held with the Marinette and Menominee County Boards and EXPLORER SOLUTIONS reference the potential uses and plans for the County Airport facility. A contract for a 7-member task force to be established focused on business aspects has been approved. Federal Grant money has been received to cover the costs of this portion of the project.

Approval of Agenda

Additions were made to the agenda: ADD 3 Farmland contracts - 1 resignation; 2 renewals.

Motion by Anderson, support by Erickson to approve agenda as amended. Motion carried.

Approval of Minutes

Meeting minutes from the July 25, 2011 meeting were approved as written. Motion by Pearson, support by Suchovsky. Motion carried.

OLD BUSINESS:

Continuation of ongoing review of the County Comprehensive (MASTER) Plan commenced. The City of Stephenson had reviewed a copy of the 2003 document and marked several items that need updating. These items were reviewed briefly and will be entered when the entire document is edited.

Previously, as new information was supplied by CUPPAD on chapters 2, 3, and 7, we reviewed those chapters. This meeting we returned to Chapters 4, 5, and 6 to continue review of needed

updates. A number of areas in chapters 4, 5, and 6 had comments from Suchovsky and discussion ensued reference each section noted and how to re-word some of the language. In Chapter 6, there is some information ref education numbers and space available that perhaps E Bergh can shed light on at the next meeting.

NEW BUSINESS:

Lake Township requested a letter from the MCPC reference the expiration date to review an amendment change to their District Map amendment submission. The time has expired for the review on this letter submitted in August. This was provided by the Chairman.

Timeline for completion of review in order to create a DRAFT document of the updated Master Plan for Menominee County was discussed. It was noted that we have exceeded our required four annual meetings, however, Mr Pearson, County Commissioner urged us to get this project into a new DRAFT by year's end. Thus, we have set another meeting to continue with Chapters 8 thru 11 in two weeks from now on Monday, November 7 at 5:00 pm.

Next Meeting Date: **Monday, November 7, 2011 – 5:00 PM**

Public Comment: (none)

Adjournment:

Motion to adjourn by Anderson, support by Erickson. Carried.

Meeting adjourned at 7:15 pm.

Minutes submitted by:

Charlene Peterson, Secretary

Menominee County Planning Commission

Menominee County Parks and Recreation Committee

Meeting Minutes

October 4, 2011

The meeting was called to order at 6:30 pm by Chair Bob Desjarlais at the Menominee County Library in Stephenson, Michigan on October 4, 2011.

Reporting for roll call were: Bob Desjarlais, Ruby Ivens, Vola Bleile, County Administrator Brian Bousley, and County Commissioners Mark Jasper and Charlie Meintz. Al Thompson, Building and Grounds and Parks Assistant Superintendent and Karen Kayser, Park Office Manager was also present. Excused for the meeting were the following members: Glenn Cody and Gail Jerzyk.

Approval of Agenda: Motion was made by Meintz and seconded by Ivens. Motion carried

Minutes: Minutes from the previous meeting on September 6, 2011 were approved. Meintz made the motion and seconded by Bleile. Motion carried.

Public Comment:

Mickey Plutz- signage in and outside of the Kleinke Park and firewood sales at Kleinke Park.

Christine Salo- Would like the opportunity to speak on item a, d, e, f and g on the agenda. Also commented on the need for grass to be planted on sites at Kleinke. Would like to see more improvements at Kleinke Park.

Mrs. Aubury – would like to see more grass planted on sites at Kleinke Park.

Mrs. Boyd – would like the opportunity to speak on item d. of the agenda.

Business:

a) Budget-Monthly review: Brian reported that certain line items are over budget but the bottom line is OK, but will have to be watched. The revenues are higher than projected. By almost 7%. Not all the revenues and expenditures are in for year end as of yet so the revenue and expenditures may increase.

b) Park Office Manager/Park Ranger Report: Park Manager, Karen Kayser distributed the latest Revenue Voucher with a total receipts amount of $6,115.50. Karen said the park is slowing down and will only have one lease site remaining. She has closed the office for season. It was a good season with minimal incidents.

c) Shakey Lakes Bathhouse Project Update: There has to be another water test done for the well, but the gallon per minutes had exceeded the required amount. Discussion ensued about the moving of the Sanitation Station to the front of the building from the back of the building as the engineered drawings had shown. Brian said he will talk to DGR and get a price for the redesign and also contact Karen Beauchamp from DEQ regarding the changes. If the changes cannot be made due to any isolation issues Brian will inform Dan Menacher.

d) Lease site policy and procedures: lengthy discussion on the protocol of everything pertaining to lease site camping and campers. The discussion resulted in an agreement that each park would be treated in some as aspects differently. Leases would be available at Shakey Lakes for only 5 or 6 month and the lease will start at the first of the month and end at the end of the month. Leases at Kleinke Park will be available for 1, 2,3,4,5 and 6 months. The lease sites at Kleinke Park would have the option of starting on the first or the fifteenth of the month. No extensions will be given. If a lease site camper would like to stay longer then an additional month would have to be purchased or the daily rate would apply. Requesting to move to a different site would be considered if the site requested was not presently occupied by another lease camper and was not considered a water site. If multiple lease campers requested to move to the same site the length of years of requesting will be the determining factor as documented on the past lease agreements. If the both lease campers have requested the same site for the same number of years neither lease camper will be able to move to the requested site. Water sites at Shakey Lakes will return to be 50% lease sites and 50% daily use site through attrition. At Kleinke Park the water sites for long term leases (5 and 6 months) will also be limited to 50%. Discussion of have a fee for outdoor appliances on lease sites.

e) Previous matters to be address: Camp Host and Camp Host training will be discussed at the next regular meeting. Advertising for the parks needs to be explored to promote the recreation opportunities Menominee County has to offer.

f) Projects for the 2011/2012 FY – Suggestion for projects from the lease campers: Signs for Kleinke Park, placing a sign by Bailey Park saying camping 1 mile ahead. Sign on the HWY announcing Shakey Lakes Park. Appling fill and seeding sites at Kleinke Park. Rangers to mow around the marshy area at Kleinke Park. Chip seal at Kleinke Park. Projects from Al and Brian: The development of River Park, grading and leveling of park roads, the cutting of phargmites on the bayside of Airport Park, Bailey Park and Stoney Point, additional fishing docks at Shakey Lakes, pavilion and pit toilet rehab at all parks, additional lighting at Kleinke park.

g) Any Other Matters: policy on car passes with the lease sites, camping deals to promote patronage at the parks a pay for 5 or 6 days and receive 1 free to be utilized by original camper not to be given away to a separate party.

Public Comment:

Christine Salo: Would like a decision made on the Policy and Procedures of the lease sites soon.

Mickey Plutz: Would like to see signs ready for next camping season in the park and on the high way. Feels each park should be treated differently.

Adjournment: Motion by Bleile to adjourn the meeting seconded by Meintz. Motion passed

Next meeting will be held at the Menominee County Library in Stephenson, Michigan at 6:30 pm on November 1, 2011.

Submitted by: Brian R. Bousley, Menominee County Administrator

NORTHPOINTE HEALTHCARE SYSTEMS BOARD OF DIRECTORS
Regular Monthly Meeting
MINUTES
715 Pyle Drive; Kingsford, Michigan
September 22, 2011 4:00 p.m.

CALL TO ORDER/ROLL CALL:
Karen Raether, Board Chairperson, called the meeting to order at 4:00 p.m. Mary Wendt, Board Secretary, conducted the roll call.

MEMBERS	Present	Excused Absent	Absent	MEMBERS	Present	Excused Absent	Absent
Connors, Peggy	X			Luhtanen, Joan	X		
DeDie, William	X			Martin, Ann	X		
DeGrave, Marylee	*X			Negro, Mari	X		
Erickson, Peggy	X			Raether, Karen	X		
Hofer, Millie	X			Plumley, Robert	X		
Lang, Bernie	X			Spence, Christine		X	

*(VTC-Video Television Conference from Northpointe Menominee Office)

REPRESENTING ADMINISTRATION: K. Thekan, B. Adrian, L. Dionne, M. Wendt

PLEDGE OF ALLEGIANCE - The Pledge of Allegiance to the Flag was recited by all

PUBLIC COMMENTS - No public comments

APPROVAL OF THE AGENDA: There were no additions to the agenda
ACTION: Moved to approve the agenda as presented.
Motion by: J. Luhtanen; supported by M. Negro. **Motion carried unanimously**

APPROVAL OF THE MINUTES:
There were no additions or corrections to the minutes from the Regular Board of Directors meeting on August 18, 2011.
ACTION: A motion was made to dispense with reading the minutes from the August 18, 2011 regular Board of Directors meeting and approve as written.
Motion by: B. Lang; supported by A. Martin. **Motion carried unanimously**.

PRESENTATION: Annual Board Training: Corporate Compliance/Ethics – Lisa Dionne
Lisa Dionne reviewed Northpointe Corporate Compliance program, provided information on HIPAA, and reviewed the Northpointe Board of Directors' Code of Ethics. Miscellaneous questions were addressed by Ms. Dionne.

CEO REPORT
Karen Thekan stated that her September 2011 CEO report was in Board packets; she provided the following updates and highlights:

Federal/StateActivity:
- Ms. Thekan provided information on the following four major reforms which are going on at the State level: My PCP (making sure children have patient centered medical homes); dual eligibles (individuals with Medicare and Medicaid); medical homes; and the national healthcare reform.

Regional Activity:
- The Great Lakes Fall conference was held in Marquette on September 12 & 13. Brian Nord-Grenier, along with Philip Gardiepy-Hefner, provided a wonderful presentation at the conference. The financial power pointe from the fall conference was provided to Board members for their information.

Local Activity:
- A meeting was recently held with Northpointe's health insurance carrier to begin looking at all options for health insurance. Northpointe will have to comply with the 80/20 public employee health insurance split and are not permitted to opt out as other county governments are permitted to do.
- A meeting will be held with John Schon to discuss the Superior Health Partners and ideas regarding integration of behavioral health and primary care.
- The Menominee County Commissioners have changed their by-laws to make all their committees volunteer committees. Since Northpointe is an "Authority" they cannot require that Northpointe do this but strongly

suggest it be done. Northpointe's By-Laws and Policies are up for annual review in October 2011 and this would be time for the Board to have a discussion if per diems, mileage, etc. should be changed.

FINANCE COMMITTEE REPORT – P. Connors

Ms. Connors highlighted the following from the Finance Committee meeting minutes:

1. **ISSUE:** Review Check Disbursement Report

   The check disbursement report in the amount of $1,357,572.24 was reviewed and recommended for Board approval.

   ACTION: A motion was made by P. Connors, supported by M. Negro to approve the check disbursement report for bills paid in the amount of $1,357,572.24 as presented.

   ROLL CALL VOTE:

MEMBERS	YES	NO	MEMBERS	YES	NO
Connors, Peggy	X		Luhtanen, Joan	X	
DeDie, William	X		Martin, Ann	X	
DeGrave, Marylee	X		Negro, Mari	X	
Erickson, Peggy	X		Raether, Karen	X	
Hofer, Millie	X		Plumley, Robert	X	
Lang, Bernie	X		Spence, Christine		

   Motion carried unanimously.

2. **ISSUE:** Review Revised Fiscal Year (FY) 2010-11 Budget

   The committee reviewed the revised FY2010-11 budget and recommended for Board approval.

   ACTION: A motion was made by P. Connors, supported by M. Hofer to approve the revised FY2010-11 budget.

R. Plumley excused at 4:55 p.m.

   DISCUSSION: Discussion ensued and miscellaneous questions were addressed by Bill Adrian

   ROLL CALL VOTE:

MEMBERS	YES	NO	MEMBERS	YES	NO
Connors, Peggy	X		Luhtanen, Joan	X	
DeDie, William	X		Martin, Ann	X	
DeGrave, Marylee	X		Negro, Mari	X	
Erickson, Peggy	X		Raether, Karen	X	
Hofer, Millie	X		Plumley, Robert		
Lang, Bernie	X		Spence, Christine		

   Motion carried unanimously.

3. **ISSUE:** Review Financial Report - August 2011

   The committee reviewed the August 2011 financial report and recommended for Board approval.

   ACTION: A motion was made by P. Connors, supported by A. Martin to approve the August 2011 financial report.

   ROLL CALL VOTE:

MEMBERS	YES	NO	MEMBERS	YES	NO
Connors, Peggy	X		Luhtanen, Joan	X	
DeDie, William	X		Martin, Ann	X	
DeGrave, Marylee	X		Negro, Mari	X	
Erickson, Peggy	X		Raether, Karen	X	
Hofer, Millie	X		Plumley, Robert		
Lang, Bernie	X		Spence, Christine		

   Motion carried unanimously.

4. **ISSUE:** Contract(s)/Agreement(s)

   The committee reviewed the following contracts and recommended for Board approval.

#	Name of Contract	Purpose of Contract	Date of Contract	Old Rate	New Rate	Change
A.	Dr. Van Holla	Psychiatric Services	9/1/11 – 8/31/12	$100 - $265 depending on the service	$100 - $265 depending on the service	n/a
	This is a renewal agreement for services through a single case agreement and self-determination.					

B.	Virginia Freeborn	Psychologist	10/1/11 – 9/30/12	$70/hr. and $35/hr. for travel	$70/hr. and $35/hr. for travel	n/a
	This is a renewal agreement for the services of a psychologist as part of the Behavior Management Committee.					
C.	Little Ones of the U.P.	Reflective Supervision	10/1/11 – 9/30/12	$50/hr.	$50/hr.	n/a
D.	Cherie Fila	Sign Language Interpreter	9/1/11 – 8/31/12	n/a	$250/day	n/a
	This is a new contract for a sign language interpreter for a consumer in Iron River. This rate includes Cherie's driving time and mileage to travel to IR and interpret for the one and a half hour group 2x/month.					
E.	Pathways	Recipient Rights	10/1/11 – 9/30/12	$32.45/hr.	Same	n/a
	This is a renewal agreement for Pathways to provide Recipient Rights services to the Newlin AFC home.					
F.	Schlaud AFC	Specialized Residential	9/1/11 – 12/31/11	$70/day	$70/day	n/a
	This is a renewal to the addendum for specialized residential services for one resident who continues to exhibit significant behaviors.					
G.	HIS, Inc.	Specialized Residential	8/16/11 – 9/30/11	$150/day	$350/day	Inc. $200/day
	This is an addendum to the contract to increase the daily rate for one person by $200/day. This person is eloping several times per day and is a danger to themself. 1 to 1 staffing is needed at this time. This is a short term arrangement. Resident moved out 8/19/11					
H.	M & M Trucking	Snow Removal	10/1/11 – 9/30/12	$55/event/salting, $80/front end loader removal, $55/hr.for dump truck	Same	n/a
	Renewal agreement for snow removal at the main Menominee office building.					
I.	Oak Crest Assisted Living	Specialized Residential	10/1/11 – 9/30/12	$68.33/day-long term care. $85.00/day-short term care.	Same	n/a
	This is a renewal agreement for specialized residential services. There are currently 4 Northpointe long term residents and 3 other consumers use the facility for respite PRN.					
J.	Superiorland Electronics, Inc.	Annual inspection and maintenance of all fire alarms and sprinkler systems	10/1/11 – 9/30/14	$190/site for alarms. For sprinkler systems: $164 – Belgium Pt. & the Pines (2 hr.). $656 – Boyington (8 hr.). $328 – Maple Ridge (4 hr.).	Same	n/a
	This is a renewal agreement for an annual inspection of all integrated alarm systems and sprinkler systems in all Northpointe facilities. Annual inspection is a Life Safety Code, OSHA and CARF requirement. The cost of the sprinkler systems varies due to the number of hours it takes to complete the test which is related to the age of the system.					
K.	Trico Opportunities	Vocational Services	9/1/11 – 9/30/11	Cap of $620,000	Cap of $710,000	Inc. of $90,000
	This is an addendum to increase the cap to $710,000 to reflect the monies actually being spent this year to provide services.					
L.	Trico Opportunities	Vocational Services	10/1/11 – 9/30/12	$9.15/organizational employment hr. $28.15/mobile crew job coach hr. $30.00/individual job coach hr.	Cap of $620,000	Reduction in cap to original amount

	This is a renewal agreement for vocational services. Trico currently serves approximately 70 Northpointe consumers. The hourly rates will remain the same but the cap will be reduced from $710,000 to $620,000/year.					
M.	HIS Inc.	Specialized Residential	9/6/11 – 11/6/11	$150.00/day	$300.00/day	$150.00/day
	This is an addendum to the current contract to increase the rate for one individual to $300/day due to behaviors and recent release from jail for initial 60 days.					

ACTION: A motion was made by P. Connors, supported by M. Negro to approve all contracts as noted above.
DISCUSSION: Discussion ensued and miscellaneous questions were addressed by Bill Adrian.

ROLL CALL VOTE:

MEMBERS	YES	NO	MEMBERS	YES	NO
Connors, Peggy	X		Luhtanen, Joan	X	
DeDie, William	X		Martin, Ann	X	
DeGrave, Marylee	X		Negro, Mari	X	
Erickson, Peggy-**Abstain**			Raether, Karen	X	
Hofer, Millie	X		Plumley, Robert		
Lang, Bernie	X		Spence, Christine		

Motion carried: 9 ayes; 1 abstain

5. **ISSUE:** Northpointe Funding History
Bill Adrian reviewed the Northpointe General Fund (GF) and Medicaid funding history for the period of FY2001 to FY2011. Miscellaneous questions were addressed by Mr. Adrian.
ACTION: Information

Marylee DeGrave excused at 5:25 p.m.

6. Miscellaneous
   - Mari Negro provided that when she attended the Great Lakes conference there were discussions regarding the possibility of having a State-wide reporting system and asked where this would leave Northpointe. Karen Thekan stated that many community mental health (CMH) agencies in the State of Michigan use the PCE system (including Northpointe) and PCE is moving forward to make sure that they are meeting the national health information technology standards. Ms. Thekan also stated that she will provide information on how many CMH agencies in the State use the PCE system when she receives this information.
   - Longevity Pay
     According to Northpointe's policies and procedures the Longevity Policy states that on an annual basis the Board will review the availability of funds to pay a longevity payment to staff. Longevity pay is based on years of service that a staff person has worked at Northpointe. Peggy Connors stated that the Finance Committee made a recommendation to table longevity pay until funding is known. Karen Thekan stated that staff are familiar with using e-mails as a communication system and this is why staff sent e-mails to the Board regarding the possibility of longevity not being paid this year. Ms. Thekan stated that longevity pay for this year was included in the revised FY2010-11 budget. Discussion ensued and miscellaneous questions were addressed by Ms. Thekan and Bill Adrian.

ACTION: A motion was made by J. Luhtanen, supported by B. Lang to pay longevity for FY2010-11.

ROLL CALL VOTE:

MEMBERS	YES	NO	MEMBERS	YES	NO
Connors, Peggy		X	Luhtanen, Joan	X	
DeDie, William	X		Martin, Ann	X	
DeGrave, Marylee			Negro, Mari		X
Erickson, Peggy	X		Raether, Karen	X	
Hofer, Millie		X	Plumley, Robert		
Lang, Bernie	X		Spence, Christine		

Motion carried: 6 ayes, 3 nays

Peggy Erickson excused at 5:50 p.m.

DISCUSSION: Karen Thekan stated that in the upcoming year the Personnel Committee should begin to look at a different option to phasing out longevity and looking at other options that would help those staff who are at the top of their pay scale. Further discussion ensued and Board consensus is that because of the possibility of funding cuts in the next fiscal year that a COLA or an insurance rebate will not be considered.

PERSONNEL COMMITTEE REPORT - B. Lang

Mr. Lang highlighted the following from the Personnel Committee meeting that was held on September 22, 2011:

Karen Thekan provided and reviewed a revised Northpointe Table of Organization which now includes who staff report to and how many staff each manager supervises. Ms. Thekan's contract was then reviewed.
ACTION: A motion was made by B. Lang and, supported by A. Martin to extend Karen Thekan's current contract for 30 days until November 6, 2011. **Motion carried unanimously.**

2. Miscellaneous
   - A Personnel Committee meeting is scheduled for Thursday, October 27, 2011 at 3:00 p.m.

CHAIRPERSONS REPORT - K. Raether

- The Michigan Association of Community Mental Health Board conference is scheduled for October 17-18 in Traverse City. Individuals planning to attend the conference are Karen Raether, Mari Negro, Karen Thekan, Josef Pelc, and Lisa Dionne. Karen Raether, Mari Negro, and Karen Thekan will be designated as voting delegates.
- Olga Dazzo and Lynda Zellar were presenters at the Great Lakes fall conference. Mari Negro, Millie Hofer, and Karen Raether all stated that the conference was excellent. Dr. Joe Cools and Dr. Jan Cools presentations from the conference will be provided to Board members for their information.

Ann Martin excused at 6:00 p.m.

OLD BUSINESS - No old business

NEW BUSINESS - No new business

BOARD PREROGATIVE/AMBASSADOR MOMENT

- Peggy Connors shared information on how successful a former consumer (who she was a social worker for) was doing.

PUBLIC COMMENTS

- Bill Adrian stated that at the October Board meeting a representative from the Michigan Municipal Risk Management Authority will be reviewing Northpointe's insurance with the Board. Mr. Adrian stated that if anyone has questions regarding Northpointe's insurance they can e-mail them to him before the Board meeting if they wish to do so.

ADJOURNMENT

Chairperson Raether stated the meeting adjourned. Meeting adjourned at 6:05 p.m.

The next regular monthly Board meeting is scheduled for October 27, 2011 in Kingsford, Michigan at 4:00 p.m.

_____
Karen Raether, Chairperson

_____
Peggy Connors, Secretary

_____
Mary Wendt, Board Secretary

MENOMINEE COUNTY BOARD OF COMMISSIONERS
DISCUSSION ITEM

SUBJECT:	**PA 152 ~ (Formerly Senate Bill 7)**
DEPARTMENT:	**Administration**
ATTACHMENTS:	**Yes**

SUMMARY:

Before January 1, 2012 the County Board must make a decision regarding the options for employee contribution towards health care benefits. PA 152 offers the following options: 80/20, hard caps and opting out. Vince Babcock from Employee Benefits Agency, Inc. will provide the cost to the county and employees for the HRA Plan currently being offered to the employees.

RECOMMENDED MOTION

Was discussed on Nov. 8, 2011 – More discussion is necessary prior to voting on this.

Submitted by: Brian Bousley **11/17/2011**
Date

WORKSHOP ACTION

	Forwarded to County Board for Approval as Recommended
	Reviewed with no motion to carry forward
	Continue after additional review/research is obtained
	Recommended with the following change(s):

COUNTY BOARD ACTION **DATE:**

	Approved
	Disapproved
	Approved with the following change(s):

Menominee County

Employee Cost Per Contract

Purchased Plan: In Network: $5000/$10,000 Deductible - No Coinsurance $30 Office Visit, $30 Chiro Visit - Out-of-Network: 10000/20000 Deductible - $10/40 Rx MOPD2X PT

Funded Plan: In Network: No Deductible - 20% Coinsurance up to $1000/$2000 $20 Office Visit, $20 Chiro Visit - Out-of-Network No Deductible - 40% Coinsurance up to $3000/$6000 - $10/40 Rx MOPD2X PT

11% Employee Contribution

		Medical, Prescription, & MERP Total Monthly Premium	County 89%	Employee 11%
Single	3	$502.69	$447.39	$55.30
Two Person	1	$1,184.07	$1,053.82	$130.25
Family	3	$1,476.08	$1,313.71	$162.37

12.5% Employee Contribution

		Medical, Prescription, & MERP Total Monthly Premium	County 87.5%	Employee 12.5%
Single	0	$502.69	$439.85	$62.84
Two Person	0	$1,184.07	$1,036.06	$148.01
Family	1	$1,476.08	$1,291.57	$184.51

20% Employee Contribution

		Medical, Prescription, & MERP Total Monthly Premium	County 80%	Employee 20%
Single	14	$502.69	$402.15	$100.54
Two Person	18	$1,184.07	$947.26	$236.81
Family	20	$1,476.08	$1,180.86	$295.22
2 Reg One Comp	2	$1,621.43	$1,297.14	$324.29

Dental/Vision

		Dental	Vision	County 100%
Single	17	$28.49	$5.32	$33.81
Two Person	19	$68.37	$12.77	$81.14
Family	24	$85.46	$15.96	$101.42
2 Reg One Comp	2	$85.46	$15.96	$101.42

Monthly County	$61,274.30
Monthly Employee	$13,190.89

Annual County Total	$735,291.60
Annual Employee Total	$158,290.60

Based on January 2012 GWC Rates

Rates and calculations are based on Employee Benefits Agency, Inc.'s review of Public Act 152 and is not intended to impart legal advice. Interpretations of the legislation vary and efforts will be made to present accurate information. This does not replace a review of the law's applicability to individual circumstances and should not be relied upon as legal advice.

EMPLOYEE BENEFITS AGENCY INC.

Vincent Babcock, CBC, LIC, GBDS

11/17/2011

IMPORTANT LEGAL UPDATE
PUBLIC ACT 152 OF 2011/SENATE BILL 7
AND COMMON QUESTIONS

Prepared by Cohl, Stoker and Toskey, P.C.
601 North Capitol Avenue
Lansing, Michigan 48823
(517) 372-9000

OVERVIEW

On September 28, 2011, Public Act 152 (formerly Senate Bill 7) became law. PA 152 would prohibit the state, local governments, public schools, colleges and universities from paying more for employee health insurance benefits than the total cost (individually or in aggregate) of $5,500 for a single person, $11,000 for a couple and $15,000 for a family plan (indexed annually to the "medical price index"), or alternatively, require municipal employees (individually or in aggregate) and elected officials to contribute at least 20 percent of the total cost of healthcare. Only local governmental bodies as defined by the Act could waive the requirements annually with a two-thirds vote of their governing body.

PA 152 is intricate and, as of yet, not legally tested. However, there are a number of issues which need be addressed in the near future by public employers to comply with PA 152. Further, we have received a number of questions relating to PA 152. To assist our clients, we have provided the more common questions below:

Question:

1. How does a public employer decide and designate which of the options will be utilized?

Answer:

Unless a different decision is made by the governing body or bodies of a public employer, all public employees default to the hard cap limit. However, with a simple majority vote, a governing body or bodies of a public employer may opt to satisfy the Act with the "at least" 20% employee contribution option.

Question:

2. Can an employer choose a different option for different types/classifications of employees, or is one option applicable to all employees?

Answer:

This question has not been decided by a court, and the language of PA 152 on this topic is subject to challenge. Consequently, it is our recommendation at this point that a single option should be chosen.

Question:

3. What entities have the option to opt-out; and what entities do not have such an option?

Answer:

Certain, but not all, public employers (i.e., cities, villages, counties, municipal electric utilities, airport authorities and metropolitan park authorities) MAY elect to opt-out if the governing body or bodies pass such a motion by a 2/3 vote. Such opt-out must be made and passed by the governing body/bodies each medical plan year. Entities with a strong mayor or county executive must concur in this decision. However, all other public employers (other than those listed above) do NOT have the ability to opt-out. This would include, but is not limited to schools, colleges or universities, road commissions, mental health authorities or community health authorities.

Question:

4. When does PA 152 take effect, and when would the employees need to comply with any cap or co-payment requirements?

Answer:

PA 152 has immediate effect as of September 28, 2011. However, the requirement for employees to begin contributing (either based upon excess over the hard cap, if this option is elected, or "at least" 20% employee contribution if the 80/20 option is elected) would not commence until the first medical plan coverage year beginning on or after January 1, 2012.

Question:

5. Is there any discretion by the public body in determining how the employee contributions are to be attributed and distributed among employees?

Answer:

Yes. Under either option (i.e the hard cap or 80/20) a public employer can, but is not required to, aggregate the total employer costs for health care and distribute the employee share "as it sees fit" so long as the aggregate total employer cost does not exceed the method elected. However, this discretion to allocate to an employee a lesser share does not, as set forth in question 7, apply to elected officials where the "at least" 20% employee contribution option is utilized.

Question:

6. How is are the employer caps or employee contributions calculated?

Answer:

Premiums or illustrative rates and all employer paid reimbursements for health care (not including dental and vision) are included in the total annual cost of medical benefit plans. As such, the cap or employer/employee percentage of the costs under the "at least" 20% employee contribution option is not limited only to

premiums or illustrative rates charged by the carrier or plan. The public body must include sums equal to the total healthcare costs paid by the employer which would include all employer payments into health savings account or into flexible spending accounts, and reimbursements made by the employer or plan to the employee (such as prescription/co-pay or deductible reimbursements).

Further, where a plan is partially or fully self insured, it would be prudent for a public body not merely to utilize the illustrative rates based upon, as traditionally calculated, prior experience but should either make monthly adjustments based upon actual cost experience or should work with the plan administrator to build in a sufficient surplus to insure meeting the hard cap/employer 80% contribution cap of PA 152.

Question:

7. How does PA 152 apply to elected officials?

Answer:

Elected officials are covered by PA 152. However, where the public body chooses to utilize the "at least" 20% employee contribution option, all elected officials MUST pay at least 20% of the total health care costs. Unlike the discretion given to a public employer in allocating a lower employee contribution to certain employees (so long as aggregate employer contribution targets are met), there is no discretion to allocate to/permit elected officials to pay less than 20% of the total health care costs. However, there is discretion for the public body to require an elected official pay more than 20% of the total healthcare costs.

Question:

8. How does PA 152 affect existing union or employment contracts?

Answer:

It depends. The Act does not effect existing labor contracts until the contract expires or is modified. If an expired collective bargaining agreement is ratified AND signed on or before September 14, 2011, the public employer and union are bound by the terms contained in the collective bargaining agreement, but only for the remaining duration of the collective bargaining agreement. However, any collective bargaining agreement (including extensions or renewals) signed on or after September 15, 2011, MUST contain the provisions required by, and fully comply with, PA 152.

Individual employment agreements are not subject to this labor contract exemption from compliance, and must be modified to comply with PA 152.

Question:

9. What, if any, role does a union play in the decision, or the timing of the implementation of the governing body's decision on which option to utilize?

Answer:

Again, this issue has not been definitively decided by a Court or the Michigan Employment Relations Commission (MERC). However, our reading of PA 152 leads us to the conclusion that the decision as to what option (hard cap, the "at least" 20% employee contribution option, or for some entities, opt-out) is solely within the legislative discretion of the governing bodies of a public employer. Thus, it is our current opinion that such legislative decisions are not mandatory subjects of bargaining which a union may demand to bargain over to impasse.

Question:

10. What are the financial ramifications for a failure to comply with PA 152?

Answer:

PA 152 penalizes public employers that do not comply with the Act in that they are subject to the penalty of reducing by 10% school aid payments or 10% of economic vitality payments that were included in statutory revenue sharing in 2011. Public employers that operate under the hard-cap, operate under the 80/20 or who OPT-OUT legally are NOT subject to penalty.

Further, even if the public body is not impacted by the above penalty, this would not mean that the public body has the option not to comply with PA 152. All laws must be complied with, and there are other legal remedies which could be used to enforce and/or other liability imposed by a court for a failure to comply with PA 152.

If you have any questions or concerns, please feel free to contact us.

Peter A. Cohl
Richard D McNulty
Cohl, Stoker & Toskey, P.C.
601 North Capitol Avenue
Lansing, Michigan 48933
pcohl@cstmlaw.com
(517) 372-9000

October 10, 2011

N:\Client\Seminars\PA 152 Legal Update Summary.wpd

STATE OF MICHIGAN
96TH LEGISLATURE
REGULAR SESSION OF 2011

PA 152

Introduced by Senator Jansen

ENROLLED SENATE BILL No. 7

AN ACT to limit a public employer's expenditures for employee medical benefit plans; to provide the power and duties of certain state agencies and officials; to provide for exceptions; and to provide for sanctions.

The People of the State of Michigan enact:

Sec. 1. This act shall be known and may be cited as the "publicly funded health insurance contribution act".

Sec. 2. As used in this act:

(a) "Designated state official" means:

(*i*) For an election affecting employees and officers in the judicial branch of state government, the state court administrator.

(*ii*) For an election affecting senate employees and officers, the secretary of the senate.

(*iii*) For an election affecting house of representatives employees and officers, the clerk of the house.

(*iv*) For an election affecting legislative council employees, the legislative council.

(*v*) For an election affecting employees in the state classified service, the civil service commission.

(*vi*) For an election affecting executive branch employees who are not in the state classified service, the state employer.

(b) "Flexible spending account" means a medical expense flexible spending account in conjunction with a cafeteria plan as permitted under the federal internal revenue code of 1986.

(c) "Health savings account" means an account as permitted under section 223 of the internal revenue code of 1986, 26 USC 223.

(d) "Local unit of government" means a city, village, township, or county, a municipal electric utility system as defined in section 4 of the Michigan energy employment act of 1976, 1976 PA 448, MCL 460.804, an authority created under chapter VIA of the aeronautics code of the state of Michigan, 1945 PA 327, MCL 259.108 to 259.125c, or an authority created under 1939 PA 147, MCL 119.51 to 119.62.

(e) "Medical benefit plan" means a plan established and maintained by a carrier, a voluntary employees' beneficiary association described in section 501(c)(9) of the internal revenue code of 1986, 26 USC 501, or by 1 or more public employers, that provides for the payment of medical benefits, including, but not limited to, hospital and physician services, prescription drugs, and related benefits, for public employees or elected public officials. Medical benefit plan does not include benefits provided to individuals retired from a public employer.

(f) "Public employer" means this state; a local unit of government or other political subdivision of this state; any intergovernmental, metropolitan, or local department, agency, or authority, or other local political subdivision; a school district, a public school academy, or an intermediate school district, as those terms are defined in sections 4 to 6 of the revised school code, 1976 PA 451, MCL 380.4 to 380.6; a community college or junior college described in section 7 of article VIII of the state constitution of 1963; or an institution of higher education described in section 4 of article VIII of the state constitution of 1963.

Sec. 3. Except as otherwise provided in this act, a public employer that offers or contributes to a medical benefit plan for its employees or elected public officials shall pay no more of the annual costs or illustrative rate and any payments for reimbursement of co-pays, deductibles, or payments into health savings accounts, flexible spending accounts, or similar accounts used for health care costs, than a total amount equal to $5,500.00 times the number of employees with single person coverage, $11,000.00 times the number of employees with individual and spouse coverage, plus $15,000.00 times the number of employees with family coverage, for a medical benefit plan coverage year beginning on or after January 1, 2012. A public employer may allocate its payments for medical benefit plan costs among its employees and elected public officials as it sees fit. By October 1 of each year after 2011, the state treasurer shall adjust the maximum payment permitted under this section for each coverage category for medical benefit plan coverage years beginning the succeeding calendar year, based on the change in the medical care component of the United States consumer price index for the most recent 12-month period for which data are available from the United States department of labor, bureau of labor statistics.

Sec. 4. (1) By a majority vote of its governing body, a public employer, excluding this state, may elect to comply with this section for a medical benefit plan coverage year instead of the requirements in section 3. The designated state official may elect to comply with this section instead of section 3 as to medical benefit plans for state employees and state officers.

(2) For medical benefit plan coverage years beginning on or after January 1, 2012, a public employer shall pay not more than 80% of the total annual costs of all of the medical benefit plans it offers or contributes to for its employees and elected public officials. For purposes of this subsection, total annual costs includes the premium or illustrative rate of the medical benefit plan and all employer payments for reimbursement of co-pays, deductibles, and payments into health savings accounts, flexible spending accounts, or similar accounts used for health care but does not include beneficiary-paid copayments, coinsurance, deductibles, other out-of-pocket expenses, other service-related fees that are assessed to the coverage beneficiary, or beneficiary payments into health savings accounts, flexible spending accounts, or similar accounts used for health care. Each elected public official who participates in a medical benefit plan offered by a public employer shall be required to pay 20% or more of the total annual costs of that plan. The public employer may allocate the employees' share of total annual costs of the medical benefit plans among the employees of the public employer as it sees fit.

Sec. 5. (1) If a collective bargaining agreement or other contract that is inconsistent with sections 3 and 4 is in effect for a group of employees of a public employer on the effective date of this act, the requirements of section 3 or 4 do not apply to that group of employees until the contract expires. A public employer's expenditures for medical benefit plans under a collective bargaining agreement or other contract described in this subsection shall be excluded from calculation of the public employer's maximum payment under section 4. The requirements of sections 3 and 4 apply to any extension or renewal of the contract.

(2) A collective bargaining agreement or other contract that is executed on or after September 15, 2011 shall not include terms that are inconsistent with the requirements of sections 3 and 4.

Sec. 6. A public employer may deduct the covered employee's or elected public official's portion of the cost of a medical benefit plan from compensation due to the covered employee or elected public official. The employer may condition eligibility for the medical benefit plan on the employee's or elected public official's authorizing the public employer to make the deduction.

Sec. 7. (1) The requirements of this act apply to medical benefit plans of all public employees and elected public officials to the greatest extent consistent with constitutionally allocated powers, whether or not a public employee is a member of a collective bargaining unit.

(2) If a court finds the requirements of section 3 to be invalid, the expenditure limit in section 4 shall apply to a public employer that does not exempt itself under section 8, except that the requirement for a majority vote of the governing body of the public employer in section 4 shall not apply. If a court finds section 4 to be invalid, the expenditure limit in section 3 shall apply to each public employer that does not exempt itself under section 8.

Sec. 8. (1) By a 2/3 vote of its governing body each year, a local unit of government may exempt itself from the requirements of this act for the next succeeding year.

(2) A 2/3 vote of the governing body of the local unit of government is required to extend an exemption under this section to a new year.

(3) An exemption under this section is not effective for a city with a mayor who is both the chief executive and chief administrator, unless the mayor also approves the exemption.

(4) An exemption under this section is not effective for a county with a county executive who is both the chief executive and chief administrator, unless the county executive also approves the exemption.

Sec. 9. If a public employer fails to comply with this act, the public employer shall permit the state treasurer to reduce by 10% each economic vitality incentive program payment received under 2011 PA 63 and the department of education shall assess the public employer a penalty equal to 10% of each payment of any funds for which the public employer qualifies under the state school aid act of 1979, 1979 PA 94, MCL 388.1601 to 388.1772, during the period that the public employer fails to comply with this act. Any reduction setoff or penalty amounts recovered shall be returned to the fund from which the reduction is assessed or upon which the penalty is determined. The department of education may also refer the penalty collection to the department of treasury for collection consistent with section 13 of 1941 PA 122, MCL 205.13.

This act is ordered to take immediate effect.

Carol Morey Viventi

Secretary of the Senate

Gary E Randall

Clerk of the House of Representatives

Approved .....

.....

Governor

Senate Fiscal Agency
P. O. Box 30036
Lansing, Michigan 48909-7536

BILL ANALYSIS

Telephone: (517) 373-5383
Fax: (517) 373-1986
TDD: (517) 373-0543

Senate Bill 7 (Substitute H-6, Conference Report-1 as adopted by Conference Committee)
Sponsor: Senator Mark C. Jansen
Senate Committee: Reforms, Restructuring and Reinventing
House Committee: Oversight, Reform, and Ethics

Date Completed: 8-24-11

CONTENT

The bill would create the "Publicly Funded Health Insurance Contribution Act" to impose certain limits on the portion of employees' medical benefit plan coverage paid for by public employers.

Employee Health Coverage

The bill includes the following:

-- Medical benefits include, but are not limited to, hospital and physician services, prescription drugs, and related benefits.

-- Under Section 3, the amount a public employer could pay, for its employees' or elected public officials' annual costs or illustrative rate and any payments for reimbursement of co-pays, deductibles, or payments into health savings accounts, flexible spending accounts, or similar accounts used for health care costs, could not be more than a total amount equal to $5,500 times the number of employees with single person coverage, $11,000 times the number of employees with individual and spouse coverage, plus $15,000 times the number of employees with family coverage, for a medical benefit plan coverage year beginning on or after January 1, 2012. A public employer could allocate its payments for medical benefit plan costs among its employees and elected officials as it saw fit.

-- Annual adjustments to the caps by the State Treasurer, based on the medical care component of the United States Consumer Price Index, would be required.

-- Under Section 4, public employers could elect to pay not more that 80% of the total annual costs for all of the medical benefit plans it offers or contributes to for its employees and elected public officials, instead of the "hard caps" included under Section 3. This election would have to be authorized by a majority vote of the public employer's governing board, or the designated State official for State public employers. Each elected public official would be required to pay 20% or more of the total annual costs of that plan. The public employer could allocate the employee's share of total annual costs of the medical benefit plans among the employees as the employer saw fit.

-- Under Section 8, a local unit of government could exempt itself from the requirements of this bill for the next succeeding year by a two-thirds vote of its governing body. A two-thirds vote of the governing body would be required to extend an exemption. Approval of the chief executive would be required in certain cases.

-- The bill provides that the requirements of the bill apply to medical benefit plans of all public employees and elected public officials to the greatest extent consistent with constitutionally allocated powers, whether or not a public employee is a member of a collective bargaining unit. If a court found the requirement of the hard cap provision to be invalid, the expenditure limit for the 80/20 provision would apply to a public employer that did not exempt itself pursuant to Section 8. If a court found the 80/20 provision to be invalid, the expenditure limit for the hard cap provision would apply to a public employer that did not exempt itself under Section 8.

-- A public employer could deduct the covered employee's cost from compensation.

-- If the requirements limiting the amount of employer-paid health insurance benefits were inconsistent with a collective bargaining agreement or other contract currently in effect, the requirements of the bill would not take effect until the collective bargaining agreement expired, or was amended, extended, or renewed. A collective bargaining agreement or contract that is executed on or after September 15, 2011, could not include terms inconsistent with the bill.

-- A 10% penalty in a public employer's economic vitality incentive payment or School Aid payment would be imposed for a public employer during the period the public employer failed to comply with the provisions of the bill.

(Public Act 63 of 2011 is the omnibus State budget for fiscal year 2011-12. The Act includes appropriations for an economic vitality incentive program, which is a revenue sharing program for cities, villages, and townships based on consolidation of services, employee compensation practices, and accountability and transparency practices.)

Retiree Health Coverage

While the bill included language asserting that the requirements of the bill do not apply to retirement plans, the State Employees' Retirement Act does, in fact, tie the maximum State amount of health care premium coverage for retirees to the level provided to active classified State civil service. Specifically, Section 20d (MCL 38.20d) of the Act affects employees first hired on or before March 31, 1997, and states, "The amount payable shall be in the same proportion of premium payable by the state of Michigan for the classified employees occupying positions in the state civil service." Section 68 (MCL 38.68) includes a similar provision for employees hired between March 31, 1997, and April 1, 2010 (those subject to graded health care coverage), such that the maximum coverage may not "exceed the lesser of 90% of the payments for health insurance coverage or the portion of the health insurance coverage premiums payable by this state for a retirant, his or her beneficiary, and his or her dependents under section 20d".

Therefore, if this legislation is enacted and the Civil Service Commission is required to (or chooses to, if the legislation is unenforceable without the adoption of SJR C, and SJR C is adopted) increase the percentage of premium paid by active State employees as outlined in the bill, then it appears that both current State retirees and future State retirees will be required to adhere to the premium cost-sharing levels established for active State employees. Retirees of other systems (schools, townships, community colleges, etc.) defined in this legislation would not be affected, unless those systems chose to make cost-sharing changes, since their retiree health coverage is not tied by statute to the active employee health care levels.

Also, State employees hired on or after April 1, 2010, already pay 20% of the premium for health care, and the State Employees' Retirement Act requires this group of employees to also pay the level of health care coverage in retirement as paid for by active employees. Therefore, adoption of this legislation would have no impact on the group of State employees hired on or after April 1, 2010, but would affect anyone hired before that date.

FISCAL IMPACT

Savings to State government would result mainly from the impact on civil service employees (either through amendments to the State Constitution approved by the voters or action by the Civil Service Commission). As of June 25, 2011, there were 44,559 classified employees enrolled in State-sponsored health insurance plans. State employees hired on or after April 1, 2010, already contribute 20% of the cost of their medical benefit plan. Annual savings to the State would depend on whether the Civil Service Commission elected the "hard cap" or the 80/20 cost share. Savings to the State would range from approximately $42.5 million to $59.1 million. Approximately 53% of the savings would be to the State General Fund, and the balance would be savings to Federal and State restricted funding sources.

The bill also could generate State savings related to retired State employees. These savings would occur if active civil service employees were charged a health care premium cost sharing rate higher than 10%, because the State Employees' Retirement Act states that retiree cost sharing is the same as active employee cost sharing. Currently, since active employees pay 10% of their health care premiums, retirees also pay 10% (until Medicaid-eligible), and the State pays the other 90%. According to the 2010 State Employees Retirement System Comprehensive Annual Financial Report, members of the system (retirees) contributed roughly $21 million for the support of "other post-employment benefits", including health, dental, and vision coverage. Assuming that the vast majority of the $21 million represents the 10% coverage for medical means that if the cost-sharing were doubled to 20%, an estimated $17 million could be generated in State savings, since member contributions would increase if the State Civil Service Commission implemented 80/20 cost sharing. Data were not available at the time of the analysis to determine an estimate of the retiree impact if hard caps were imposed on active civil service employees.

Comprehensive data do not exist to accurately calculate the potential savings to local government, school districts, and public higher education employers from this bill. During budget hearings this year, several community colleges and universities reported that their employees were already paying 20% of the cost of health insurance.

Fiscal Analyst: Bill Bowerman
Joe Carrasco
Kathryn Summers

S1112\s7sd

This analysis was prepared by nonpartisan Senate staff for use by the Senate in its deliberations and does not constitute an official statement of legislative intent.

MENOMINEE COUNTY BOARD OF COMMISSIONERS
DISCUSSION ITEM

SUBJECT:	**InSequence ~ Maps-in-deed**
DEPARTMENT:	**Administration**
ATTACHMENTS:	**No**

SUMMARY:

On December 14, 2010 William Kennedy presented the Maps-in-deed information to the County Board. The next step at that time was to **gather fee information and approve the fees** so the public will be able to purchase information online. That has not happened.
We need commissioner input to "go live" with the County GIS project.

RECOMMENDED MOTION

Submitted by: Brian Bousley **11/17/2011**
Date

WORKSHOP ACTION

	Forwarded to County Board for Approval as Recommended
	Reviewed with no motion to carry forward
	Continue after additional review/research is obtained
	Recommended with the following change(s):

COUNTY BOARD ACTION **DATE:**

	Approved
	Disapproved
	Approved with the following change(s):

December 14, 2010

APPROVED on 12/28/10

Proceedings of a Regular Meeting of the Board of Commissioners in and for the County of Menominee and the State of Michigan were held at the Menominee County Courthouse, Menominee, Michigan.

Chairman Eichhorn called the meeting to order at 6:00 P.M. followed by the Pledge of Allegiance.

A call of the roll indicated that the following Commissioners were present/absent:

Present: Coms. Anderson, Eichhorn, Furlong, Lang, and Meintz

Absent: None

Brian Bousley asked to amend the agenda to add two items. Under Action Item #11 add other employee contracts to also be discussed during closed session. Under New Business Finance Items, add f. Discussion of paying Valley Mechanical's bill for work at the jail.

Moved by Com. Meintz, supported by Com. Anderson to approve the agenda as amended. Motion was approved 5-0.

Chairman Eichhorn called for public comment.

Public Comment:

-Mari Negro – Commented on the letter that Marylee DeGrave wrote to the County Commissioners.

Moved by Com. Furlong, supported by Com. Lang to approve the minutes from the November 23, 2010 Regular County Board meeting. Motion was approved 5-0.

Presentations:

-William Kennedy, InSequence – Menominee County Maps InDeed. William conducted his presentation on the phone while also using the courtroom video teleconferencing equipment. The commissioners asked several questions. The next step will be for the County Board to approve the fees charged by InSequence before the public will be able to purchase information from the website.

Department Head/Elected Officials Reports: None

Moved by Com. Anderson, supported by Com. Meintz to appoint Leslie Negro to the Building Code – Construction Board of Appeals for a two year term (1/1/2011 ~ 12/31/2012). Discussion ensued. Com. Furlong and Lang do not feel that this board should be making these appointments and it should be left up to the next board to make the appointments. Motion was approved 3-2, Com. Furlong and Lang voted nay.

Moved by Com. Furlong, supported by Com. Lang to approve Commissioner Per-Diems/Expenses as recently submitted for payment. Motion was approved 5-0.

Moved by Com. Furlong, supported by Com. Meintz to place miscellaneous boards/committees/commission reports on file at the courthouse. Motion was approved 5-0.

Moved by Com. Meintz, supported by Com. Eichhorn to go into closed session, per request of Brian Bousley (pursuant to the Open Meetings Act, Act 267 of 1976, 15.268 Section 8(a)) to discuss County Administrator, Brian Bousley's one year performance evaluation. And, to discuss health insurance negotiations with the E-911 department. Motion was approved by roll call vote 5-0 at 6:31 p.m.

Moved by Com. Meintz, supported by Com. Eichhorn to return to open session at 6:51 p.m. Motion was approved by roll call vote 5-0.

Moved by Com. Lang, supported by Com. Meintz to approve the AFSCME E-911 health insurance negotiations as discussed in closed session. Motion was approved 5-0.

12/28/10 CB mem.

New Business (discussion only)

Personnel Items:

a. None

Building and Grounds/Parks Items:

a. New Park and Camping Rates for 2011 - The consensus of the board is to move it forward to the next meeting.
b. Donated Minnie Property Bid Review – There was only one bid for $500. Brian Bousley stated the fair market value of the property is assessed at $5,200. The consensus of the board is to move it forward to the next meeting.
c. Mileage payment for Park and Recreation Committee members – Com. Eichhorn thinks that this should apply to all committees. Com. Furlong doesn't know why this is an issue since the Park and Recreation Committee has it in their by-laws that they can collect for this. Brian Bousley said they need to create a line item for this.

Miscellaneous Items:

a. Northpointe Health Care Systems Board – Brian stated that he went to their last meeting and they are handling the issue.
b. InSequence - Menominee County Maps Indeed-GIS – Brian thinks that any money made from the website should go towards improving the website first. The consensus of the board is to have Brian sit down with the townships and discuss this.
c. Mineral Rights – Com. Lang discussed a letter from Rebecca Humphries' office to Tom Boerner regarding state owned property. Dan Hass is waiting for the new Attorney General to take office before he resubmits a request from Menominee County.

Sherry Smith

From: Brian Bousley
Sent: Monday, November 01, 2010 9:36 AM
To: garry anderson; geichhorn3@hotmail.com; Bernie73@new.rr.com; meintz@wildblue.net; ltjfurlong@hotmail.com
Cc: Sherry Smith
Subject: FW: Maps inDeed Link

Commissioners,

Here is a link from InSequence for the GIS website for Menominee County. Let me know what you think. They would like to put on our website and will be contacting business to use it to obtain information. Please let me know what you think and how you want me to handle it with the website. If we want this on the agenda to discuss next week please let me know. It could be in the form of a motion to activate the site or for discussion. InSequence is ready to launch. We need input and a consensus before we put any type of link on the website.

Thanks,

Brian

From: William Kennedy [mailto:wkennedy@insequenceinc.com]
Sent: Tuesday, October 26, 2010 11:08 AM
To: Brian Bousley; pschoud@menomineeco.com
Subject: Maps inDeed Link

Here is the link to your Maps InDeed page for your IT Dept. so they could add it to your web page.

https://map.mapsindeed.com/midcollection?collectionname=mi-menominee

Thank you,

William Kennedy
InSequence Inc.
672 North River St
Suite 201
Plains Pa 18705
570.371.1341phone
570.829.6230 fax
wkennedy@insequenceinc.com

This message, including any attachments, contains confidential information intended for a specific individual and purpose and is protected by law. If you are not the intended recipient, please contact sender immediately by reply e-mail and destroy all copies. You are hereby notified that any disclosure, copying, or distribution of this message, or the taking of any action based on it, is strictly prohibited.

WARNING: Computer viruses can be transmitted via email. The recipient should check this email and any attachments for the presence of viruses. The sender accepts no liability

MENOMINEE COUNTY BOARD OF COMMISSIONERS
DISCUSSION ITEM

SUBJECT:	**Miscellaneous Bills**
DEPARTMENT:	**Administration**
ATTACHMENTS:	**yes**

SUMMARY:

Board to review recently submitted Miscellaneous Bills as paid on Nov. 10 & 16, 2011 in the amount of $115,668.34.

RECOMMENDED MOTION

To approve Miscellaneous Bills as paid on Nov. 10 & 16, 2011 in the amount of $115,668.34.

Submitted by: Brian Bousley **11/17/2011**
Date

WORKSHOP ACTION

	Forwarded to County Board for Approval as Recommended
	Reviewed with no motion to carry forward
	Continue after additional review/research is obtained
	Recommended with the following change(s):

COUNTY BOARD ACTION **DATE:**

	Approved
	Disapproved
	Approved with the following change(s):

General Fund Expenditures

101-101 Board of Commissioners
101-103 Other Legislative
101-131 Circuit/Family Court
101-132 Family Court
101-136 District Court
101-141 Friend of Court
101-148 Probate Court
101-150 Jury Commission
101-172 County Administrator
101-192 Board of Canvassers
101-211 Legal
101-215 County Clerk
101-253 County Treasurer
101-257 Equalization
101-261 MSU Extension
101-262 Elections
101-265 Courthouse Grounds
101-267 Prosecuting Attorney
101-268 Register of Deeds
101-275 Drain Commissioner
101-301 Sheriff Department
101-331 Marine Law
101-332 Snowmobile Law
101-334 Off-Road Recreational Vehicle
101-335 ATV Education
101-401 Planning Commission
101-426 Emergency Management
101-526 Waste Management
101-601 Health & Welfare
101-635 B&G/Hospital Operation
101-648 Medical Examiner
101-681 Vets Burial & Relief
101-682 Veterans Affairs
101-728 Economic Development
101-997 Appropriations
101-999 Operating Transfers

Special Revenue Funds

205 Road Patrol
208 County Parks
215 Friend of Court
220 Park Improvements
243 Remonumentation
249 Building Code
256 ROD - Automation Fund
264 Local Corrections Officers Training
265 Drug Law Enforcement Forfeiture
266 E911
269 Law Library
271 County Library
272 CDBG - Wells Fargo Grant
274 CDBG - County
276 CERT-Citzns Emerg. Response Team
277 LEPC
280 Inmate Canteen fund
281 K-9
282 Justice Training
284 Revenue Sharing
285 Senior Citizens
292 Child Care
294 Veterans' Trust
296 Special Child Care Funds

516 DTRF-Delinquent Tax Revolving Fund
517 DTRF-PA 123 Foreclosure

APPROVED
NOV 10 2011
CHIEF FISCAL OFFICER
MENOMINEE COUNTY MICHIGAN
BRP

MENOMINEE COUNTY
Claims Audit Report

Vendor Name / Vcher#	Voucher Date	Vendor's Ref#	Description	Debit Accnt#	$Amount	SepCk	Claim Total
Bank Account: General							
Ace Hardware							$39.56
20749	10/27/2011	203317/2	Battery - 9V & AA	101-265-755.00	29.98		
20750	10/14/2011	203209/2	Spray Paint	101-265-755.00	9.58		
ALGER-DELTA COOPERATIVE ASSOCI							$806.61
20735	10/31/2011	383200	Shakey Lakes Electrical	208-751-920.01	50.49		
20736	10/31/2011	383001	Shakey Lakes Electrical	208-751-920.01	52.70		
20737	10/31/2011	1503500	Shakey Lakes Electrical	208-751-920.01	90.92		
20738	10/31/2011	380300	Shakey Lakes Electrical	208-751-920.01	119.87		
20739	10/31/2011	379700	Shakey Lakes Electrical	208-751-920.01	59.90		
20740	10/31/2011	370500	Shakey Lakes Electrical	208-751-920.01	90.38		
20741	10/31/2011	367100	Shakey Lakes Electrical	208-751-920.01	55.49		
20742	10/31/2011	369802	Shakey Lakes Electrical	208-751-920.01	38.73		
20743	10/31/2011	367200	Shakey Lakes Electrical	208-751-920.01	179.85		
20744	10/31/2011	383301	Shakey Lakes Electrical	208-751-920.01	68.28		
Anderson Culligan							$33.25
20812	10/31/2011	177810	Water for Circuit Court (x5)	101-131-931.00	33.25		
Anderson, Bill							$24.42
20941	11/7/2011	Reimbursement	Mileage - Planning Commission	101-401-755.00	24.42		
ANGELIS MENOMINEE INC							$479.82
20722	10/25/2011	0154211-IN	Food for E911 Training	266-326-881.00	128.35		
20723	10/26/2011	1001221-IN	Credit Memo (E911 Training)	266-326-881.00	-15.00		
20873	10/3/2011	3564211-IN	Inmate Groceries	101-301-770.00	51.38		
20874	10/3/2011	0162211-IN	Inmate Groceries	101-301-770.00	49.10		
20875	10/8/2011	2041211-IN	Inmate Groceries	101-301-770.00	78.75		
20876	10/19/2011	0374211-IN	Inmate Groceries	101-301-770.00	4.09		
20877	10/19/2011	2707211-IN	Inmate Groceries	101-301-770.00	48.15		
20878	10/19/2011	3642110-IN	Inmate Groceries	101-301-770.00	78.22		
20879	10/19/2011	7610211-IN	Credit for Inmate Groceries	101-301-770.00	-8.18		
20880	10/26/2011	1323211-IN	Inmate Groceries	101-301-770.00	64.96		
AT&T - Carol Stream, IL							$2,662.72
20763	10/19/2011	906863202310	October 19 - November 18, 2011	101-103-850.00	584.99		
20792	10/19/2011	90686344110	October 19 - November 18, 2011	101-103-850.00	960.73		
20802	10/19/2011	906863661410	October 19 - November 18, 2011	266-325-850.00	422.97		
20930	11/1/2011	906R41083911	November 1 - November 30, 2011	101-103-850.00	694.03		
AT&T Long Distance							$214.24
20860	10/19/2011	854528091	Telephone Services	101-103-850.00	214.24		
Badger Mailing & Shipping							$756.53
20753	11/1/2011	39198	Hasler Contract Charge for 1/6/12 - 1/5/	101-253-729.01	756.53		
Banc of America Leasing							$711.63
20806	10/22/2011	012000495	Probation/Parole Office - November 201	101-131-942.00	139.97		
20807	10/22/2011	012000496	November 2011	101-301-934.00	317.84		
20807	10/22/2011	012000496	November 2011	101-261-942.00	253.82		
BAY AREA MEDICAL CENTER							$113.00
20725	10/10/2011	MENCTY	Pre Employment Physical - Sally Filibec	101-268-727.00	113.00		
Bergh, Erik							$23.31
20942	11/7/2011	Reimbursement	Mileage - Planning Commission	101-401-755.00	23.31		
BP							$220.94
20797	11/2/2011	32012981	Gasoline Sales - October 2011	249-371-742.00	220.94	x	

APPROVED
NOV 10 2011
CHIEF FISCAL OFFICER
MENOMINEE COUNTY MICHIGAN

MENOMINEE COUNTY
Claims Audit Report

Vendor Name / Vcher#	Voucher Date	Vendor's Ref#	Description	Debit Accnt#	$Amount	SepCk	Claim Total
Bank Account: General							
Brian Bousley							$383.58
20947	10/27/2011	Reimbursement	UP Fall Forum - HR Resources & Welln	101-172-860.00	86.58		
20948	11/3/2011	Reimbursement	Smart Compliance Workplace Cabinets	101-265-755.00	198.00		
20948	11/3/2011	Reimbursement	Smart Compliance Workplace Cabinets	208-751-755.02	99.00		
Brunelle, Jennifer							$56.61
20893	11/1/2011	Reimbursement	Mileage - October 2011	296-664-860.00	56.61		
BS&A Software							$1,075.00
20851	11/1/2011	078715	Annual Svc/Support Fee 11/1/11 - 11/1/	101-103-857.00	1,075.00		
BUSINESS ON WHEELS							$200.45
20780	10/31/2011	11022	1998 Dodge Ram Maintenance	208-751-930.02	200.45		
Cellcom Wisconsin RSA 04							$530.78
20903	10/27/2011	605109	Cellular Services	101-426-755.00	12.48		
20903	10/27/2011	605109	Cellular Services	101-301-850.00	518.30		
CITY OF MENOMINEE - 2511 10TH ST.							$9,465.84
20772	7/31/2011	3034	July 2011 Gasoline Charges	101-265-742.00	116.71		
20772	7/31/2011	3034	July 2011 Gasoline Charges	101-682-860.00	37.24		
20772	7/31/2011	3034	July 2011 Gasoline Charges	101-257-742.00	30.92		
20772	7/31/2011	3034	July 2011 Gasoline Charges	266-325-860.00	21.95		
20772	7/31/2011	3034	July 2011 Gasoline Charges	101-257-742.00	32.25		
20773	10/28/2011	3045	August 2011 Gasoline Charges	101-265-742.00	444.89		
20773	10/28/2011	3045	August 2011 Gasoline Charges	101-682-860.00	32.59		
20773	10/28/2011	3045	August 2011 Gasoline Charges	266-325-860.00	8.65		
20773	10/28/2011	3045	August 2011 Gasoline Charges	101-257-742.00	27.27		
20773	10/28/2011	3045	August 2011 Gasoline Charges	101-257-742.00	21.28		
20773	10/28/2011	3045	August 2011 Gasoline Charges	266-325-860.00	22.94		
20773	10/28/2011	3045	August 2011 Gasoline Charges	101-426-860.00	46.22		
20773	10/28/2011	3045	August 2011 Gasoline Charges	101-257-742.00	21.27		
20773	10/28/2011	3045	August 2011 Gasoline Charges	101-257-742.00	30.59		
20773	10/28/2011	3045	August 2011 Gasoline Charges	101-257-742.00	6.65		
20849	11/8/2011	December 2011	Tower Lease	266-326-942.00	351.67		
20907	10/28/2011	3037	Gasoline Sales - July 2011	205-315-742.00	4,193.82		
20908	10/28/2011	3048	Gasoline Sales - August 2011	205-315-742.00	4,018.93		
City of Stephenson - P.O. Box 467							$202.82
20810	10/31/2011	709	Annex - Water, Electric, Sewer	101-261-920.01	16.00		
20810	10/31/2011	709	Annex - Water, Electric, Sewer	101-261-920.02	30.00		
20810	10/31/2011	709	Annex - Water, Electric, Sewer	101-261-920.03	156.82		
CLOVERLAND PAPER CO							$679.47
20796	10/29/2011	96871	Courthouse - Towels, Tissues	101-265-755.01	161.92		
20870	10/21/2011	96783	Paper Cups	101-301-770.00	80.39		
20871	10/28/2011	96873	Liners, Steel Wool Pads, Degreaser, Tc	101-301-770.00	148.02		
20928	11/4/2011	96935	Annex - Towels, Tissue, Liners	101-265-755.01	111.04		
20929	11/4/2011	96934	Courthouse - Tissue, Towels, Liners	101-265-755.01	178.10		
COHL STOKER & TOSKEY P C							$66.00
20732	11/1/2011	41552	Legal - October 24, 2011	101-211-807.00	66.00		
CORE TECHNOLOGY CORPORATION							$4,175.00
20919	10/18/2011	63462	PO# 02592 Software Support	101-301-934.02	4,175.00		
Country Mile Document Destruct							$797.38
20786	10/31/2011	10833	Document Shredding on 10/27/2011	101-265-755.00	689.00		
20938	11/8/2011	11899	Shredding of Documents	101-265-755.00	108.38		

APPROVED
NOV
CHIEF FISCAL OFFICER
MENOMINEE COUNTY MICHIGAN

MENOMINEE COUNTY
Claims Audit Report

Vendor Name / Vcher#	Voucher Date	Vendor's Ref#	Description	Debit Accnt#	$Amount	SepCk	Claim Total
Bank Account: General							
DEKETO, LLC							$873.40
20805	11/1/2011	DK10-11	October 2011 Documents (x397)	256-277-857.00	873.40		
Dennis-Ruleau, Dawn							$670.00
20895	11/1/2011	4658	Crisis Intervention - October 2011	296-668-801.00	670.00		
EAGLEHERALD PUBLISHING, LLC							$1,005.00
20776	10/31/2011	1445	PO# 02588 Election Notice	101-262-727.00	1,005.00		
Eldercare Home Pharmacy							$749.12
20901	10/31/2011	3025731	Inmate Medications	101-301-770.01	749.12		
Employee Benefits Agency, Inc.							$240.00
20746	11/1/2011	2495	November 2011 - Monthly Admin Fee	101-103-712.02	240.00		
ERICKSON WAYNE							$16.65
20943	11/7/2011	Reimbursement	Mileage - Planning Commission	101-401-755.00	16.65		
FRIEND OF COURT							$17.00
20924	11/8/2011	2000-009194-DM	Release of LEIN - Tom Bebo	101-141-803.00	17.00		
FRIEND OF COURT ASSOCIATION -							$275.00
20940	11/1/2011	Dues	2010 FOCA Dues for Friends & Associa	101-141-802.00	275.00		
Friends Ofc Prod Whse Direct							$194.29
20734	11/4/2011	015307I	FOC - Office Supplies	101-141-727.00	132.31		
20798	11/1/2011	015286I	CDR & Case's	101-257-727.00	61.98		
Furlong, James							$66.60
20757	10/26/2011	Reimbursement	Mileage - October 2011	101-101-860.02	66.60		
Gallardo, Amy							$417.05
20897	11/7/2011	Reimbursement	Community Garden - Mileage & Suipplie	296-667-801.01	57.41		
20897	11/7/2011	Reimbursement	Community Garden - Mileage & Suipplie	296-668-801.00	98.79		
20898	11/7/2011	4668	Community Garden	296-668-801.00	260.85		
Galls, An Aramark Company							$147.93
20910	10/17/2011	511695211	Ez Adju Cp Holster	205-315-755.00	147.93		
GREAT AMERICAN DISPOSAL CO THE							$429.27
20855	10/14/2011	1AE00009	Ash Container at Shakey Lakes	208-751-942.00	429.27		
Great Outdoors							$521.50
20816	10/20/2011	10806	Jail Door Repairs	101-265-755.00	521.50		
Gregory, Raymond G.							$175.00
20770	11/2/2011	2011-141-MI	Court Appointed Legal - Michael Shank:	101-148-807.00	95.00		
20887	11/7/2011	2011-142-MI	Court Appointed Legal - Simmons	101-148-807.00	80.00		
Hasler							$600.00
20809	10/31/2011	14804441	Postage Machine	101-253-729.01	600.00		
Hi Tec Building Services							$1,495.00
20856	10/30/2011	001901	Cleaning Service for October 2011	101-265-801.00	1,495.00		
Ivens, Ruby E.							$53.28
20764	11/2/2011	Reimbursement	Parks Committee - Mileage for Nov. 1, 2	208-751-860.00	26.64		
20765	11/2/2011	Reimbursement	Parks Committee - Mileage for Oct. 4, 2	208-751-860.00	26.64		
J S ELECTRONICS, INC.							$425.00
20848	11/1/2011	16813	Tower Lease - November 2011	266-326-942.00	425.00		
Jasper, Mark							$33.30
20724	10/27/2011	Reimbursement	October 2011 Mileage	101-101-860.05	33.30		

APPROVED
NOV
CHIEF FISCAL OFFICER
MENOMINEE COUNTY, MICHIGAN

MENOMINEE COUNTY
Claims Audit Report

Vendor Name / Vcher#	Voucher Date	Vendor's Ref#	Description	Debit Accnt#	$Amount	SepCk	Claim Total
Bank Account: General							
Joel Hensley, RN							$1,565.00
20800	10/30/2011	Blood Draw	P. Kuntze (10/27/11)	101-267-801.01	100.00		
20815	10/21/2011	Blood Draw	W. Price (10/21/11)	101-267-801.01	100.00		
20902	11/4/2011	Nursing Services	September 11 - September 24, 2011	101-301-770.01	1,365.00		
K MART 7031							$22.16
20813	10/28/2011	07031 102811 010 416	olored Pencils, Alcohol Swabs, Cleani	266-325-727.00	4.49		
20813	10/28/2011	07031 102811 010 416	olored Pencils, Alcohol Swabs, Cleani	266-325-755.00	17.67		
Kleiman, Marc							$132.65
20850	11/8/2011	Reimbursement	Mileage - Meetings & Election	101-215-860.00	23.31		
20850	11/8/2011	Reimbursement	Mileage - Meetings & Election	101-262-860.00	109.34		
Klumb, Joseph							$307.50
20925	11/8/2011	09-091-GA	Guardian-Ad-Litem Services	101-148-807.00	307.50		
Kulwich, Gerald							$204.57
20894	11/1/2011	Reimbursement	Mileage & Travel (J.P.O.)	296-665-860.00	204.57		
LANG BERNARD							$380.18
20733	11/3/2011	Reimbursement	Mileage - October 2011	101-101-860.01	380.18		
LENCA SURVEYING							$3,970.00
20931	11/5/2011	11140	Project Year 2011 - 10/3/11 - 11/6/11	243-245-801.07	3,970.00		
Lesperance, Sandra							$310.00
20891	10/28/2011	11-071	Clothing Allowance (E. H.)	292-662-843.02	310.00		
LexisNexis Matthew Bender							$90.51
20905	10/18/2011	23591811	MI Penal & Veh Hdbk - Fall 2011	205-315-727.00	90.51		
Linder Implement Co., Inc.							$82.00
20751	10/3/2011	94395	BSHS, Caps, Bolts, Nuts	208-751-930.02	23.00		
20752	10/4/2011	94399	Belt	208-751-930.02	59.00		
Linderoth, Janis							$97.68
20859	10/24/2011	Reimbursement	Mileage	101-101-860.09	97.68		
Lufts Advertiser							$312.50
20939	10/26/2011	October 2011	Advertising	101-262-727.00	275.00		
20939	10/26/2011	October 2011	Advertising	101-101-901.00	37.50		
M & M Trucking, Inc.							$405.00
20936	11/8/2011	6676	River Park - Gravel & Leveling	208-751-930.04	405.00		
Manpower							$944.00
20754	11/9/2011	23116345	Week Ending 10/30/2011	101-141-704.00	472.00		
20927	11/6/2011	23153158	Regina Mistark - Week Ending 11/6/201	101-141-704.00	472.00		
Meintz, Charlie							$38.85
20756	11/1/2011	Reimbursement	Mileage - October 2011	101-101-860.04	38.85		
Menards - Marinette							$245.33
20747	10/31/2011	84964	Gutter Screw Spike	208-751-755.02	10.94		
20748	10/31/2011	84778	WDG Anchor	208-751-755.02	51.12		
20759	10/27/2011	83609	Plastic Roof CMT, Straps	208-751-755.02	42.00		
20778	11/2/2011	85345	Exit Light (x3) & Batteries	101-265-755.00	141.27		
MENOMINEE ANIMAL SHELTER							$112.22
20766	10/27/2011	9111	September 2011 Impounding	101-601-958.00	112.22		
MENOMINEE COUNTY JOURNAL							$924.00
20777	11/1/2011	143	PO# 02586 - Election Notice	101-262-727.00	924.00		

APPROVED
NOV 1 0 2011
CHIEF FISCAL OFFICER
MENOMINEE COUNTY MICHIGAN

MENOMINEE COUNTY
Claims Audit Report

Bank Account: General

Vendor Name / Vcher#	Voucher Date	Vendor's Ref#	Description	Debit Accnt#	$Amount	SepCk	Claim Total
MENOMINEE COUNTY SHERIFF DEPT							$358.00
20865	11/2/2011	Reimbursement	Travel gas transport	101-301-742.00	10.00	x	
20865	11/2/2011	Reimbursement	MSA Conference - Holmes	101-301-860.00	61.33	x	
20865	11/2/2011	Reimbursement	Transport (x2)	205-315-860.00	10.06	x	
20866	11/2/2011	Reimbursement	Groceries for Inmates	101-301-770.00	132.49	x	
20866	11/2/2011	Reimbursement	Firearms	101-301-860.00	20.87	x	
20866	11/2/2011	Reimbursement	Firearms	101-301-860.00	20.84	x	
20866	11/2/2011	Reimbursement	MSA Conferance - Drust	101-301-860.00	49.13	x	
20866	11/2/2011	Reimbursement	Transport (x2)	205-315-860.00	35.79	x	
20866	11/2/2011	Reimbursement	Firearms Update	205-315-860.00	7.29	x	
20866	11/2/2011	Reimbursement	Firearms	205-315-860.00	10.20	x	
MGT of America, Inc.							$1,184.80
20745	10/31/2011	21264	July, August, September 2011 - DHS-28	101-141-801.00	1,184.80		
Michigan Sheriffs' Association							$343.48
20869	11/3/2011	20117205	Banner	101-301-755.00	68.48		
20904	8/22/2011	20116366	Registration Fall Conference 2011 - Mai	101-301-881.00	275.00		
MICHIGAN STATE INDUSTRIES							$168.40
20885	10/18/2011	1229 9265	Laundry Bleach & Detergent	101-301-770.00	168.40		
MID-COUNTY SMALL ENGINES, LLC							$51.45
20774	10/20/2011	701	Studs & Nuts	208-751-930.02	25.50		
20775	10/25/2011	702	Mix Oil, Oil & Filter	208-751-930.02	25.95		
MILLERS ACTION OFFICE SUPPLY I							$352.27
20801	11/1/2011	081360	E911 Office Supplies	266-325-727.00	79.98		
20804	10/31/2011	081319	Toner	101-215-727.00	102.99		
20811	10/28/2011	081270I	Receipt Book, Laminating Pouches, Cal	101-215-983.00	16.99		
20811	10/28/2011	081270I	Receipt Book, Laminating Pouches, Cal	101-215-727.00	85.75		
20922	11/1/2011	081332	Veteran's - Office Supplies	101-682-727.00	37.57		
20923	10/26/2011	081217	Veteran's - Office Supplies	101-682-727.00	28.99		
MSK, LLC							$1,680.00
20921	10/17/2011	Training	PO# 02589 Survival Solutions & Defens	264-363-881.00	1,680.00		
NKS Tire & Service, Inc.							$236.88
20913	11/3/2011	79794	2006 Chevy Impala - Alignment Four W	205-315-934.02	54.99		
20914	11/3/2011	79785	2006 Chevy Impala - Lug Nuts & Alignm	205-315-934.02	88.99		
20915	11/3/2011	79811	2009 Chevy Impala - Alignment	205-315-934.02	54.99		
20916	11/4/2011	79818	2011 Chevy Impala - Oil Change & Filte	205-315-934.02	37.91		
Northeast WI Technical College							$157.00
20814	10/26/2011	CS19382	Dispatcher Career Survival (Menghini)	266-326-881.00	157.00		
PAIDL'S TRUE VALUE HARDWARE							$1,045.48
20789	10/5/2011	A27667	Trees/Shrubs (x1000)	208-751-755.05	1,000.00		
20790	10/6/2011	B28505	12 Volt Batteries (x30)	208-751-930.02	36.99		
20791	10/30/2011	B30097	Grip Chuck	208-751-930.02	8.49		
Pan-O-Gold Baking Co.							$104.08
20883	10/25/2011	40683129803	Inmate Groceries	101-301-770.00	54.45		
20884	10/18/2011	40683129102	Inmate Groceries	101-301-770.00	49.63		
Pathways Substance Abuse Serv.							$7,183.00
20803	11/1/2011	Convention Facility	Convention & Tourism Tax	101-601-835.01	7,183.00	x	
Pearson, Jim							$55.55
20779	11/4/2011	Reimbursement	Mileage - October 2011	101-101-860.03	55.55		

APPROVED
NOV 10
CHIEF FISCAL OFFICER
MENOMINEE COUNTY MICHIGAN

MENOMINEE COUNTY
Claims Audit Report

Vendor Name / Vcher#	Voucher Date	Vendor's Ref#	Description	Debit Accnt#	$Amount	SepCk	Claim Total
Bank Account: General							
Peterson, Charlene							$18.87
20944	11/7/2011	Reimbursement	Mileage - Planning Commission	101-401-755.00	18.87		
Pinecrest Medical Center							$15.03
20906	11/1/2011	October 2011	Telephone Charges	205-315-727.00	15.03		
Plutchak Fab, LLC							$586.25
20932	11/8/2011	34685	Manlift to Remove Windows	101-265-755.00	586.25		
Quill Corporation							$590.01
20719	11/1/2011	7757127	P.A.'s - Office Supplies	101-267-727.00	204.21		
20720	11/1/2011	7773207	P.A.'s Office Supplies	101-267-727.00	12.99		
20721	11/1/2011	7775302	Toner - PA's Office	101-267-727.00	55.78		
20847	11/3/2011	7847490	Keyboard & Phone Message Book	101-267-727.00	39.96		
20867	10/26/2011	7636077	Toner Cartridges & Envelopes	101-301-727.00	277.07		
Randall Phillipps							$125.00
20808	10/31/2011	Various Cases	Court Appointed Legal - Holmstrom	101-132-807.00	125.00		
RDJ SPECIALTIES, INC - P.O. BOX 1000, DEPT. 145							$1,148.36
20917	8/12/2011	023166	PO# 02590 - #2 Pencils	101-301-755.00	515.42		
20918	8/3/2011	022645	PO# 02591 Badge Stickers (x4000)	101-301-755.00	632.94		
Reinhart Foodservice							$895.04
20881	10/25/2011	978699	Inmate Groceries	101-301-770.00	752.89		
20882	10/25/2011	978827	Inmate Groceries	101-301-770.00	142.15		
Safelite Fulfillment, Inc.							$295.82
20793	10/21/2011	5170-131572	2000 Ford Ranger - Glass Claim	208-751-984.00	216.89		
20794	10/21/2011	5170-131573	1998 Dodge Pickup	208-751-984.00	78.93		
Salfai, Sharon							$23.50
20864	11/7/2011	Motion Hearing	September 8, 2011 Transcript - Teeple	101-267-806.00	3.00		
20888	11/7/2011	Motion Hearing	Transcript & Copy Fee - Teeple	101-132-806.00	20.50		
Sault Tribe Youth Facility							$2,400.00
20896	11/7/2011	10-015	Out of Home Placement Costs (A.N.)	292-662-843.05	2,400.00		
Schultz, Lillian R.							$23.31
20945	11/7/2011	Reimbursement	Mileage - Planning Commission	101-401-755.00	23.31		
Simple Distributors, LLC							$63.75
20854	10/26/2011	5637-1	Envelopes, Correction Tape, Arrow Flag	101-172-727.00	63.75		
State of Michigan - DNRE Cashier's Office ERMD CGL							$301.47
20781	10/30/2011	723869	Kleinke Park - Water Testing	208-751-920.00	100.49	x	
20861	10/30/2011	723875	Shakey Lakes Campground	208-751-920.00	100.49	x	
20862	10/30/2011	723876	Shakey Lakes Beach Well	208-751-920.00	100.49	x	
State of Michigan - MI Dept. of Human Services							$7,113.42
20892	11/1/2011	4656	Monthly Offset - September 2011	292-662-843.01	7,113.42		
State of Michigan - State Tax Commission							$125.00
20863	11/3/2011	11/1/2011	Renewal of Assessment Administration	101-257-802.00	125.00		
State of Michigan-SupremeCourt							$1,861.32
20758	10/27/2011	Circuit Court 2011	Software Support Oct, Nov, Dec 2011	101-131-858.03	1,861.32	x	
STEPHENSON MARKETING COOPERATI							$145.45
20933	10/31/2011	462643	October 2011 Sales	208-751-930.02	145.45		
Stericycle, Inc.							$101.97
20886	10/26/2011	4002931223	Inmate Medical Supplies	101-301-770.01	101.97		

APPROVED
NOV 10
CHIEF FISCAL OFFICER
MENOMINEE COUNTY MICHIGAN

MENOMINEE COUNTY
Claims Audit Report

Bank Account: General

Vendor Name / Vcher#	Voucher Date	Vendor's Ref#	Description	Debit Accnt#	$Amount	SepCk	Claim Total
SUPERIOR STATE ADMINISTRATORS							$16.75
20731	11/1/2011	19066	HRA Plan (x5)	101-103-712.02	16.75		
SVINICKI, GAIL M.							$25.60
20799	11/1/2011	Reimbursement	Genetic Testing - Walters/Collins 2011	101-267-840.00	25.60		
The Ebco Company, LLC							$448.00
20771	11/3/2011	011152	Legal Size Folders (x700)	101-136-727.00	448.00		
The First National Bank&Trust							$31.60
20755	10/31/2011	628840339	FOC Service Charge	101-141-817.00	31.60		
Time Warner Cable							$454.11
20853	10/25/2011	004-700185701-001	October 25 - November 24, 2011	101-103-851.01	329.95		
20872	10/30/2011	004-620475202-001	November 6 - December 5, 2011	101-301-770.00	124.16		
TWIN CITY ELECTRIC, Inc.							$63.00
20935	11/8/2011	77604	Service Call - Clear Call Log in ROD	101-103-850.00	63.00		
U.E.S. COMPUTERS, INC.							$6,637.96
20729	11/1/2011	58157	Monthly DVD Backup - October 2011	101-103-857.00	100.00		
20760	10/20/2011	34118	ROD - Virus Removal	101-103-857.00	65.00		
20761	10/26/2011	34158	PA Office & Juvenile Court - Connectior	101-103-857.00	149.99		
20782	10/31/2011	34082	Set up work station for Sally Filibeck	101-103-857.00	50.00		
20783	10/31/2011	34202	Equalization computer maintenance	101-103-857.00	95.00		
20787	10/31/2011	34200	Judge Hupy's PC Setup	101-103-857.00	112.99		
20788	10/31/2011	34119	Delivery & installation of District Court C	101-103-857.00	95.00		
20818	10/25/2011	34078	New Hard Drive & Installation - Veteran:	101-103-857.00	179.99		
20889	10/25/2011	58059	Work Station - Judge Hupy	101-132-970.00	542.50		
20889	10/25/2011	58059	Work Station - Judge Hupy	101-148-970.00	542.50		
20890	11/3/2011	58203	Word Perfect Office	101-132-970.00	115.00		
20890	11/3/2011	58203	Word Perfect Office	101-148-970.00	114.99		
20920	11/1/2011	58171	PO# 02587 Computer Towers (x6)	101-301-998.00	4,410.00		
20937	11/8/2011	34257	Maintenance on Election P.C.	101-103-857.00	65.00		
UNIFORM SHOPPE							$171.30
20868	10/10/2011	203285	Uniforms - Jennifer White	101-301-745.00	77.90		
20909	10/31/2011	203797	Uniform - Erdman	205-315-745.00	93.40		
UPCAP SERVICES INC							$86.76
20852	9/30/2011	1356	Work Crew at Shakey Lakes 8/9 & 8/11	208-751-930.04	86.76		
Valenti, Susan F.							$263.10
20730	10/31/2011	Reimbursement	October 2011 Meals & Mileage	101-131-860.00	263.10		
Verizon Wireless							$157.64
20795	10/22/2011	2647859036	Building & Grounds - Cellular Services	101-265-850.01	157.64		
WALTER BROTHERS INC							$137.86
20784	10/28/2011	A150819	Filter	101-265-755.00	14.99		
20785	10/5/2011	A148821	Humidifier Wick	101-265-755.00	31.98		
20911	10/2/2011	B123406	Stapler & Staples	205-315-755.00	82.94		
20912	10/11/2011	A149366	Staples	205-315-755.00	7.95		
Warner, Fredrick							$331.27
20899	11/7/2011	Reimbursement	Supplies & Mileage - Can Zone	296-667-801.01	8.72		
20899	11/7/2011	Reimbursement	Supplies & Mileage - Can Zone	296-668-801.00	146.30		
20900	11/7/2011	4670	Can Zone	296-668-801.00	176.25		
Warren Suchovsky							$9.99
20946	11/7/2011	Reimbursement	Mileage - Planning Commission	101-401-755.00	9.99		

MENOMINEE COUNTY
Claims Audit Report

Vendor Name / Vcher#	Voucher Date	Vendor's Ref#	Description	Debit Accnt#	$Amount	SepCk	Claim Total
Bank Account: General							
Waste Management							$407.49
20817	11/1/2011	1315021-1856-8	November 2011	101-265-801.00	407.49		
White Water Associates, Inc.							$60.00
20762	10/28/2011	125626	Water Analysis (x4)	208-751-920.00	60.00		
Wil-Kil Pest Control							$120.00
20726	10/26/2011	1945616	Courthouse	101-265-801.00	60.00		
20727	10/27/2011	1945649	Annex	101-265-801.00	30.00		
20728	10/27/2011	1945648	Library	101-265-801.00	30.00		
WISCONSIN PUBLIC SERVICE CORP - P O BOX 19003							$5,224.45
20767	10/27/2011	0402047856-00004	Courthouse	101-265-920.04	1,091.96		
20768	10/27/2011	0402191663-00001	Health Center Electrical	101-265-920.03	224.86		
20769	10/27/2011	0402191663-00001	Commercial Gas - Health Care Center	101-265-920.04	89.83		
20857	10/25/2011	0402047856-00006	Stoney Point	208-751-920.01	33.08		
20858	10/25/2011	1052007726-00000	Bailey House	208-751-920.01	27.05		
20858	10/25/2011	1052007726-00000	Kleinke Park Street Lighting	208-751-920.01	29.03		
20858	10/25/2011	1052007726-00000	Kleinke Park	208-751-920.01	55.30		
20858	10/25/2011	1052007726-00000	Bailey Park Street Lighting	208-751-920.01	12.65		
20934	11/4/2011	0402055840-00001	Jail - Electrical Service	101-265-920.03	3,660.69		
Total Amount for Bank Account: General							$85,668.34

APPROVED
NOV 10
CHIEF FISCAL OFFICER
MENOMINEE COUNTY MICHIGAN

MENOMINEE COUNTY
Claims Audit Report

Vendor Name / Vcher#	Voucher Date	Vendor's Ref#	Description	Debit Accnt#	$Amount	SepCk	Claim Total
Bank Account: General							
Valley Mechanical, Inc.							
20989	11/16/2011	Contract	Boiler House Upgrade	101-103-998.00	30,000.00		$30,000.00
Total Amount for Bank Account: General							$30,000.00

APPROVED
NOV 16
CHIEF FISCAL OFFICER
MENOMINEE COUNTY MICHIGAN

MENOMINEE COUNTY BOARD OF COMMISSIONERS
DISCUSSION ITEM

SUBJECT:	**Commissioner Per Diems and Expenses**
DEPARTMENT:	**Administration**
ATTACHMENTS:	**Yes**

SUMMARY:

Board to review Commissioner per diems and expenses as recently submitted for payment

RECOMMENDED MOTION

Submitted by: Brian Bousley **11/17/2011**
Date

WORKSHOP ACTION

	Forwarded to County Board for Approval as Recommended
	Reviewed with no motion to carry forward
	Continue after additional review/research is obtained
	Recommended with the following change(s):

COUNTY BOARD ACTION **DATE:**

	Approved
	Disapproved
	Approved with the following change(s):

MENOMINEE COUNTY
BOARD OF COMMISSIONERS
REIMBURSEMENT VOUCHER

COPY

RECEIVED
11/7/11
Menominee County Administrator

Mileage: $.51/mile ~ effective 01 Jan. 2011

*Meals Breakfast ~ up to $7.50
Lunch ~ up to $10.00
Dinner ~ up to $17.50

*must attach receipt for reimbursement

Name: **Jim Pearson ~ District 3**

Date	Mileage, meals, Bridge Tolls, Lodging, etc.	Account Number	Amount
10-11-11	Wallace, Stephenson, Wallace	101-101-860.03	8.25
10-19-11	Wallace, Menominee, Wallace	101-101-860.03	15.40
10-24-11	Wallace, Stephenson, Wallace	101-101-860.03	8.25
10-25-11	Wallace, Stephenson, Wallace	101-101-860.03	8.25
10-31-11	Wallace, Menominee, Wallace	101-101-860.03	15.40
		101-101-860.03	
		101-101-860.03	
		101-101-860.03	
		101-101-860.03	
		101-101-860.03	
		101-101-860.03	
		101-101-860.03	
	Conference Expenses		
		101-101-859.00	
		101-101-859.00	
		101-101-859.00	
		101-101-859.00	
		101-101-859.00	
		101-101-859.00	
Total Mileage, Meals, Lodging & Conference Expenses to be reimbursed			55.55

It is hereby certified that the above account is true and correct and that no part of the same has been paid.

Signed

11/04/11

Date

Commissioner Per Diem Expense Form

COPY

RECEIVED 11/7/11 Menominee County Administrator

Name of Commissioner Jim Pearson

$50.00 per meeting - Reg. or Special County Board meeting (Not more than $100 for unrelated meetings on any one day)
$75.00 MAC or UPACC Conference

Date	Meeting Description & Duration	Meeting Expense
10-11-11	County Board Meeting	50.00
10-19-11	Airport Meeting	50.00
10-24-11	Planning Commission	50.00
10-25-11	County Board meeting	50.00
10-31-11	Special airport meeting	50.00
	Total Per Diem	250.00

It is hereby certified that the above account is true and correct and that no part of the same has been paid.

Commissioner Signature: [signature]

Date: 11/04/11

MENOMINEE COUNTY
BOARD OF COMMISSIONERS
REIMBURSEMENT VOUCHER

COPY

Mileage: $.51/mile ~ effective 01 Jan. 2011
.555

*Meals Breakfast ~ up to $7.50
Lunch ~ up to $10.00
Dinner ~ up to $17.50

*must attach receipt for reimbursement

Name: **Mark Jasper ~ District 5**

Date	Mileage, meals, Bridge Tolls, Lodging, etc.	Account Number	Amount
10/4/11	Stepensen parks 630	101-101-860.05	20 miles $11.10
10/11/11	MCC Stepensen 500-530	101-101-860.05	20 miles $11.10
10/25/11	" " "	101-101-860.05	20 miles 11.10
		101-101-860.05	
		101-101-860.05	
		101-101-860.05	
		101-101-860.05	
		101-101-860.05	
		101-101-860.05	
		101-101-860.05	
		101-101-860.05	
		101-101-860.05	
	Conference Expenses		
		101-101-859.00	
		101-101-859.00	
		101-101-859.00	
		101-101-859.00	
		101-101-859.00	
		101-101-859.00	
Total Mileage, Meals, Lodging & Conference Expenses to be reimbursed			$33.30

It is hereby certified that the above account is true and correct and that no part of the same has been paid.

Mark J. Jasper
Signed

10/27/11
Date

Commissioner Per Diem
Expense Form

COPY

Name of Commissioner Mark J Jasper

$50.00 per meeting - Reg. or Special County Board meeting (Not more than $100 for unrelated meetings on any one day)
$75.00 MAC or UPACC Conference

Date	Meeting Description & Duration	Meeting Expense
10/4/11	Parks Stepensen 6:30	$50.00
10/11/11	MCC Stepensen 5:00-5:30	$50.00
10/25/11	MCC Stepensen @5:30	$50.00
Total Per Diem		150.00

It is hereby certified that the above account is true and correct and that no part of the same has been paid.

Commissioner Signature: Mark J Jasper

Date: 10/27/11

MENOMINEE COUNTY BOARD OF COMMISSIONERS
DISCUSSION ITEM

SUBJECT:	**Miscellaneous Boards/Committees/Commission reports**
DEPARTMENT:	**Administration**
ATTACHMENTS:	**yes**

SUMMARY:

Miscellaneous Boards/Committees/Commission Reports, Discussion

RECOMMENDED MOTION

Submitted by: Brian Bousley **11/17/2011**
Date

WORKSHOP ACTION

	Forwarded to County Board for Approval as Recommended
	Reviewed with no motion to carry forward
	Continue after additional review/research is obtained
	Recommended with the following change(s):

COUNTY BOARD ACTION **DATE:**

	Approved
	Disapproved
	Approved with the following change(s):

Menominee County
Department of Human Services Board
2612 10th Street
Menominee, MI 49858

BOARD MEMBERS
MARY BRADLEY
MICHAEL KAUFMAN
PEGGY BASTIEN

DIRECTOR
RUSSELL K. SEXTON

Date: September 27, 2011

The regular meeting of the Menominee County Department of Human Services Board was called to order by Michael Kaufman, Boar Chair, at 9:00 a.m. The meeting was held in the Menominee County Department of Human Services Board Room.

Present: Michael Kaufman, Board Chair; Mary Bradley, Board Member; Peggy Bastien, Board Member and Russell Sexton, Board Secretary.

Others Present: Bernie Lang, Menominee County Board of Commissioners

APPROVAL OF AGENDA:
A motion to approve the agenda was made by Mary Bradley and seconded by Peggy Bastien. Motion passed without opposition.

APPROVAL OF August 30, 2011 MINUTES:
Minutes of the August 30, 2011 Board Meeting were reviewed. A motion to accept the minutes was made by Peggy Bastien and seconded by Mary Bradley. Motion passed without opposition.

FINANCIAL REPORT:
The financial report for August 2011 was reviewed. There was $150.00 in expenditures for DHS Board meeting attendance and $650.00 in expenditures for reimbursement for MCSSA Summer Conference attendance; leaving a balance of $4,573.96.

Other expenditures for the MCSSA Summer Conference that were not annotated, but will be on the September report were: Registration fee - $195.00 and Hotel - $228.90.

Other expenditures for MCSSA Statewide and District One dues that were not annotated but will be on the September report were: Statewide - $819.10 and District One - $150.00

There were no expenditures from the Child Care fund, leaving a balance of $3,500.00.

A motion to accept the financial report was made by Mary Bradley and seconded by Peggy Bastien. Motion passed without opposition.

DIRECTOR'S REPORT:

Staffing Information: Mr. Sexton reviewed the staffing package for FY 2012 with the board.

MCSSA Information: Various MCSSA documents were distributed.

The next scheduled MCSSA District One meeting will be on October 12, 2011, in Marquette at the Ramada Inn. All future meetings will be the second Wednesday of the quarter and will be at the Ramada Inn in Marquette.

Statewide Director's Meeting Information: Mr. Sexton went over his notes from the September 20 and 21, 2011 Statewide Director's Conference that was held in Lansing.

Collaborative Issues: No new information.

Business Plan Update: No update.

Miscellaneous: Mr. Sexton reviewed a variety of policy changes and other current events with the board, including: FAP Asset policy change; FIP 48/60 month welfare reform policy change and numbers of clients affected; the Modified Settlement Agreement; Crawley update.

Board Member Input/Suggestions: The Board Members provided a variety of input regarding these changes, which was greatly appreciated by the director.

Motion to accept the Director's Report as submitted made by Mary Bradley and supported by Peggy Bastien. Motion passed without opposition.

UNIT REPORTS: No unit report was provided.

BOARD BUSINESS:

Approval of Vouchers: Vouchers were reviewed and approved. Motion made by Mary Bradley and supported by Peggy Bastien. Motion passed without opposition.

NEW BUSINESS: There was no new business presented.

PUBLIC COMMENT: None.

NEXT MEETING: October 25, 2011 at 9:00 a.m. in the Menominee County DHS Board Room.

ADJOURNMENT: Motion to adjourn made by Mary Bradley and supported by Peggy Bastien. Motion passed without opposition. Meeting adjourned at 9:30 a.m.

Russell K. Sexton
Board Secretary

Michael Kaufman
Chairperson

Pc: DHS Board Members
DHS Northern Area Office
Menominee County BOC
Menominee DHS Office File
Bernie Lang, Menominee County BOC Liaison

CITY OF MENOMINEE, MICHIGAN
SPECIAL COUNCIL PROCEEDINGS
NOVEMBER 4, 2011

A special meeting of the Menominee City Council, City of Menominee, County of Menominee, State of Michigan, was held Friday, November 4, 2011 immediately after an 8:15 a.m. Committee of the Whole meeting. The meeting was held in the Municipal Complex Council Chambers.

The Honorable George W. Krah called the meeting to order and led the pledge of allegiance to the flag.

PRESENT: Council Members Fernstrum, Hudon, Mick, Organ, Plemel, Pohlmann, Walker, and Williams; Mayor Krah
ABSENT: None

PRESENT: 9 ABSENT: 0

Mayor Krah opened the special meeting that he called for the purpose of considering the following agenda:

A) CALL THE MEETING TO ORDER.

B) PLEDGE OF ALLEGIANCE TO THE FLAG.

C) ROLL CALL.

D) APPROVAL OF MEETING AGENDA.

E) MINUTES OF PREVIOUS MEETINGS:
1) Special meeting of October 28, 2011.

F) PUBLIC HEARINGS:

G) PUBLIC COMMENT:
(1) Maximum 15-minute public comment session. Statements, not debate, limited to three minutes per person on agenda items only.

H) COMMUNICATIONS:

I) REPORTS OF OFFICERS:

J) MISCELLANEOUS:

K) REPORTS OF STANDING COMMITTEES:

L) MOTIONS AND RESOLUTIONS:
1) Ordinance amending M.O.C. 8:3.1 for the budget adjustment for the budget adjustment for Technology Plan.

M) PUBLIC COMMENT.

N) ADJOURN.

There being no additions or corrections to the minutes of the special meeting of October 28, 2011, the minutes stood approved as presented.

PUBLIC COMMENT:

Mayor Krah opened the public comment session called for the purpose of hearing citizen comments on agenda items only.

No one was heard.

A motion was made by Council Member Williams and seconded by Council Member Mick to close the public comment session. This motion was carried unanimously.

MOTIONS AND RESOLUTIONS:

The following ordinance amendment was next on the agenda:

ORDINANCE AMENDING THE FISCAL YEAR 2011-2012
M.O.C. 8.3.1 BUDGET, APPROPRIATION FOR THE GENERAL FUND (101)

Section 1:

THE CITY OF MENOMINEE HEREBY ORDAINS:

That the appropriation for the General Fund Budget be amended as follows:

SECTION 9. The objects and purposes for which the amounts appropriated in Section 1, 3 and 4 hereof for the City General Fund Operations are as follows:

City Council		21,000.
Judicial		1,500.
Mayor		1,322.
Manager	~~174,050~~	200,550.
Board of Review		2,700.
Assessor		78,285.
Clerk/Treasurer		315,171.
Elections		13,034.
Buildings and Grounds		158,157.
Attorney		134,207.
Fixed Expenses		419,143.
Police		1,403,661.
Auxiliary Police		2,000.
Crossing Guards		16,400.
MI Justice Training Fund		5,000.
Fire		1,151,866.

Building Inspector	114,830.
Animal Control	18,000.
Sidewalks	63,848.
Highways, Streets, Bridges	238,000.
Street Lighting	130,426.
Alleys	22,886
Zoning Board	1,500.
Economic Development	35,500.
Community Development	25,600.
Recreation	95,313.
Parks Maintenance	174,563.
Spies Field Maintenance	79,553.
Henes Park	79,679.
TOTALS	$5,003,722.

Section 2:

And, that this ordinance should become effective upon adoption.

A motion was made by Council Member Fernstrum and seconded by Council Member Williams to approve the foregoing ordinance amendment.

AYES: Krah, Mick, Pohlmann, Walker, Williams, and Fernstrum
NAYS: Hudon, Organ, and Plemel

This motion was carried.

PUBLIC COMMENT:

Mayor Krah opened the public comment session.

No one was heard.

A motion was made by Council Member Mick and seconded by Council Member Plemel to close the public comment session. This motion was carried unanimously.

ADJOURN:

A motion was made by Council Member Plemel and seconded by Council Member Mick to adjourn the meeting. This motion was carried unanimously.

Thomas F. DeNike, City Clerk/Treasurer

/skj

K. McNeely called the regular meeting of the Menominee County Library Board to order at 11:00 AM on Tuesday, October 18, 2011.

Roll call was taken and present were J. Bejgrowicz, J. Freis, K. McNeely, and Commissioner James Furlong. M. Erdman and C. Peterson were excused.

J. Bejgrowicz moved to approve the agenda. Seconded by J. Freis, motion carried.

Public Participation: There was no public participation at this time.

J. Freis moved to approve the minutes from the September 20, 2011 meeting. Seconded by J. Bejgrowicz, motion carried.

J. Bejgrowicz moved to approve the financial report. Seconded by J. Freis, motion carried.

J. Freis moved to pay the October bills. Seconded by J. Bejgrowicz, motion carried.

Director's Report:

A. The monthly and year-end circulation stat comparisons are in the board packets.

B. The Friends held their Fall Gathering at the Little Nugget on Sunday, October 16. Their next regular meeting will be held this Friday, October 21 at 9:00 AM.

   The Friends are continuing to sell tickets for the Holiday Festival raffle to be held on Saturday, November 5. Raffle items are on display in the display cabinet in the lobby.

C. P. Cheski attended the Superiorland Library Cooperative Board meeting via ReadyTalk on Wednesday, September 28.

D. On Thursday, September 29, P. Cheski attended the annual U.P.R.L.C. meeting in Marquette and also participated in the afternoon workshops at the Peter White Library.

E. We received confirmation that our USF Forms 486 and 472 were approved.

F. We are no longer able to purchase toner for the copier in the staff workroom. The Xerox representative from Marquette is sending me information on their newer copiers. Xerox would like to retire the WorkCentre 4118 copier and is making good deals on trade-ins. P. Cheski will start comparing prices on Xerox and other copier brands.

Old Business:

A. Great Start Regional Resource Center Grant – Update – We are continuing to catalog these items and are waiting for delivery of the hanger display bags for the puppets.

B. Great American Disposal – Update – The dumpster was delivered on October 3 and the bi-weekly pickup service began on Friday, October 14.

New Business:

A. Fiscal Year 2011-2012 Preliminary Budget – Update -- The County Board approved the budget at their regular meeting on Tuesday, September 27, 2011.

B. Board By-Laws – After discussion, J. Bejgrowicz moved to revise the by-laws, changing the reorganizational meeting to February and clarifying public participation at board meetings. Seconded by J. Freis, motion carried.

Other Board Concerns: K. McNeely asked how the van delivery service and customer placing holds on books was going. P. Cheski said that customers were using the hold system more frequently and that the van service was very efficient.

Public Participation: Commissioner Furlong asked how much was in the bookmobile replacement fund.

As there was no further business, J. Freis moved to adjourn the meeting. Seconded by J. Bejgrowicz, motion carried. The meeting adjourned at 11:17 AM.

Menominee-Delta-Schoolcraft
Community Action Agency

GOVERNING BOARD MEETING

Thursday, October 13, 2011
511 First Ave. N., Escanaba
1:30 p.m. (EDT)

MINUTES

The meeting was called to order 1:31 p.m. by Chair Karen Wigand. A quorum was noted with the following present:

MEMBERS PRESENT

Omer Doran, Schoolcraft
Dan LaFoille, Schoolcraft
Tom Lippens, Delta
Mari Negro, Menominee
Walter Multerer, Menominee
Marv Mayer, Menominee
Ken Bryant, Schoolcraft
Myra Croasdell, Delta
Gil Vandenhouten, Menominee
Bernie Lang, Menominee
John Stapleton, Schoolcraft
Karen Wigand, Delta
Dave Rivard, Delta
Beth Pletcher, Menominee
Dave Anthony, Menominee
Ken Penokie, Delta
Brenda Moya, Menominee
George Lyon, Schoolcraft

MEMBERS ABSENT

Gil Sablack, excused
Geri Nelson, excused
Charmaine Lehman, excused
Pastor Levin, excused
Dave Moyle
Ruth Helwig
George Arkens

OTHERS PRESENT

William Dubord, Executive Director
Cathy Pearson, Executive Assistant
Theresa Nelson, RSVP Director
Beau Miller, Finance Director

Members were mailed the September 8, 2011 Governing Board minutes for their review and ***THEY WERE ACCEPTED WITH A MOTION FROM DAN LAFOILLE, SECONDED BY DAVE RIVARD; MOTION CARRIED.***

FINANCE COMMITTEE REPORT

The Chair called on Treasurer Dan LaFoille who reported that the Finance Committee met on 10/11/2011 and reviewed ***AND RECOMMENDS ACCEPTANCE OF THE CAA AUGUST ACCOUNTS PAYABLE SCHEDULES, SECONDED BY DAVE RIVARD; MOTION CARRIED.*** The committee also reviewed the September Accounts Payable Schedules ***AND RECOMMENDS THEIR ACCEPTANCE, SUPPORTED BY TOM LIPPENS; MOTION CARRIED; 1 – NAY*** Mr. LaFoille noted that the committee also reviewed the Financial Procedures Manual as is required annually, and recommends no changes at this time. They also reviewed the Cost Allocation Plan as required and recommends no changes to them at this time. Mr. Multerer asked if the summary

sheets for the accounts payable schedules could be provided to the members at the board meeting.***(see attachment "A")***

SAFETY COMMITTEE REPORT

Karen Wigand called on Tom Lippens who reported there was one accident involving a bus aide who hurt her thumb buckling a child into safety seat. There was no work time lost or recommendations. ***MR. BRYANT MOVED TO ACCEPT THE SAFETY COMMITTEE REPORT, GEORGE LYON SUPPORTED THE MOTION; MOTION CARRIED. (see attachment "B")***

NOMINATING COMMITTEE REPORT

The Chair called on George Lyon who reported that the Nominating Committee met on 10/11/2011 to discuss the two vacancies created by the deaths of Helen Walker and Ernie Hoholik. They also noted that several board terms are due to expire in the next several months. Due to these vacancies and reduced funding it was suggested that the size of our board be discussed. Our funding requirements dictate that we have between 15-51 board members. Most CAA's throughout the state have 18 or less and those with 27 or more have a much greater number of counties they operate. There is no requirement to have equal representation by county or sector, the only stipulation that there be ***at least*** one third consumer representation. The committee stressed that they do not wish to force anyone off the board should the board decide to decrease its size. It was suggested that the current board roster, statement of requirements for board composition, average size in the state for CAA's, and the budget/costs to support the board be given to the Nominating Committee for their review. After much discussion Mr. Mayer called the board size issue to question. ***KEN PENOKIE MOVED TO REFER THE BOARD COMPOSITION ISSUE BACK TO THE NOMINATING COMMITTEE FOR THEIR REVIEW AND RECOMMENDATION TO THE FULL BOARD, SUPPORTED BY WALTER MULTERER; MOTION CARRIED. (see attachment "C")***

APPROVAL OF PERSONNEL POLICY FINAL DRAFT

Members were mailed a copy of the proposed Personnel Policy final draft for their review. The Chair called on Mari Negro who suggested that "handicap" be changed to "disability" on page 2 & 3. Mr. LaFoille also suggested that we add a policy on retaining employees for a certain length of time if we pay for any classes for them, or have a payback policy if they leave within the stated timeframe.

Mr. Lyon noted that he thinks the Grievance and Appeals section should be reviewed to consider having grievances heard by a Grievance Committee rather than the full board. There was discussion on the fact that the last grievance process was cumbersome and painful for the grievant, staff and the board. It was noted that even that being said, the process seemed to work. It was suggested that a committee could be comprised of two board members chosen by management, two by the grievant and a third pulled out of a hat.

Mr. Lyon suggested that there be someone trained to guide the termination/grievance process. ***MARI NEGRO MOVED TO CONTINUE THE GRIEVANCE PROCESS AS IT IS, BERNIE LANG SUPPORTED THE MOTION; MOTION CARRIED, LAFOILLE & LYON – NAY.***

Ms. Wigand called on Brenda Moya who expressed some frustration that management's termination decision wasn't supported, when that's what we've hired them to do and they've studied all the facts. She also suggested that a written vote be taken in grievance decisions, rather than an oral vote. Mr. Penokie noted that whoever is hearing a grievance, it's their job to remain impartial. After much discussion ***MR. LAFOILLE MOVED TO REFER THE POLICIES BACK TO THE PERSONNEL COMMITTEE, SECONDED BY MR. RIVARD; MOTION CARRIED.***

Karen Wigand thanked the members for all of their input.

ACCEPTANCE OF 2010-2011 PROGRAM INFORMATION REPORT

Members were given a copy of the 2010-2011 Head Start Program Information Report for their review. The Chair called on Kim Johnson who explained that the white pages are the agency's numbers, the buff pages are our numbers compared to the rest of the state and the blue are our numbers compared to the nation. ***DAVE RIVARD MOVED TO ACCEPT THE 2010-2011 PIR REPORT AND PLACE IT ON FILE, JOHN STAPLETON SUPPORTED THE MOTION; MOTION CARRIED.***

ACCEPTANCE OF 8/31/11 HEAD START POLICY COUNCIL MINUTES

Members received a copy of the 8/31/11 Head Start Policy Council minutes for their review and ***THEY WERE ACCEPTED UPON A MOTION FROM MR. LAFOILLE, SECONDED BY MR. RIVARD; MOTION CARRIED.***

FUNDING UPDATE

Ms. Wigand called on Bill Dubord who reported that Head Start is operating under a Continuing Resolution until at least 11/15. They continue to be flat-funding which makes it difficult to maintain operations at the same level.

EXECUTIVE DIRECTOR'S REPORT

The Chair called on the Executive Director who noted that the Head Start classes are at full enrollment; however, there are extremely low wait lists. ***GEORGE LYON MOVED TO ACCEPT THE EXECUTIVE DIRECTOR'S REPORT, MR. MAYER SUPPORTED THE MOTION; MOTION CARRIED.***

OTHER BUSINESS

There was no other business to come before the board.

ADJOURMENT

The meeting adjourned at 2:51 ***WITH A MOTION FROM GEORGE LYON, SECONDED BY DAVE RIVARD; MOTION CARRIED. THE NEXT MEETING IS THURSDAY NOVEMBER 10, 2011***

Attachment "A"

THE FINANCIAL COMMITTEE HAS REVIEWED THE ACCOUNTS PAYABLE SCHEDULES FOR THE MONTH OF AUGUST 2011 FOR THE **MENOMINEE-DELTA-SCHOOLCRAFT COMMUNITY ACTION AGENCY.** WE HAVE DETERMINED THAT THE EXPENDITURES MADE AGAINST THE VARIOUS PROGRAMS ARE REASONABLE AND PROPERLY CHARGED WITHIN BUDGETARY RESTRICTIONS IN THE FOLLOWING AMOUNTS:

HEAD START	$	60,055
EARLY HEAD START		61,887
EARLY-ON CHILDHOOD		16,341
GSRP		-
ASSET & LIABILITY ACCOUNTS		63,284
TOTAL	$	201,566

SIGNED _____
(TREASURER)

DATE 10-11-11

Attachment "A"

THE FINANCIAL COMMITTEE HAS REVIEWED THE ACCOUNTS PAYABLE SCHEDULES FOR THE MONTH OF SEPTEMBER 2011 FOR THE **MENOMINEE-DELTA-SCHOOLCRAFT COMMUNITY ACTION AGENCY.** WE HAVE DETERMINED THAT THE EXPENDITURES MADE AGAINST THE VARIOUS PROGRAMS ARE REASONABLE AND PROPERLY CHARGED WITHIN BUDGETARY RESTRICTIONS IN THE FOLLOWING AMOUNTS:

HEAD START	$	112,257
EARLY HEAD START		44,067
EARLY-ON CHILDHOOD		311
GSRP		-
ASSET & LIABILITY ACCOUNTS		85,831
TOTAL	$	242,465

SIGNED _____
(TREASURER)

DATE 10-11-11

Attachment "A"

FINANCE COMMITTEE MEETING
Tuesday, October 11, 2011
12:45 p.m.

MINUTES

The following were present: Dan LaFoille, Omer Doran, Bernie Lang, Rev. Ingmar Levin, Gil Sablack, Bill Dubord, Beau Miller and Cathy Pearson.

The committee reviewed the CAA Accounts Payable Schedules for Aug. ***AND THEY WERE ACCEPTED WITH A MOTION FROM OMER DORAN, SECONDED BY BERNIE LANG; MOTION CARRIED.***
The committee reviewed the HRA Accounts Payable Schedules for Aug. ***AND THEY WERE ACCEPTED WITH A MOTION FROM MR. DORAN, SUPPORTED BY GIL SABLACK; MOTION CARRIED.***

The committee reviewed the CAA Accounts Payable Schedules for Sept. ***AND THEY WERE ACCEPTED WITH A MOTION FROM PASTOR LEVIN, SECONDED BY GIL SABLACK; MOTION CARRIED.***

The committee reviewed the HRA Accounts Payable Schedules for Sept. ***AND THEY WERE ACCEPTED WITH A MOTION FROM BERNIE LANG, SUPPORTED BY MR. SABLACK; MOTION CARRIED.***

Members were given a copy of the Head Start credit card charges from July 27 – Aug. 24, 2011 for their review. The committee asked if they could be given the HRA credit card charges to review in the future as well.

Mr. LaFoille asked if we have any policy whereby when schooling is paid for by the agency for an employee, they are required to stay in our employ for a certain amount of time. Mr. Dubord indicated we do not have currently have a policy but will look into the matter for a future Personnel Policy revision.

Members were mailed a copy of the Financial Procedures Manual for their review as this needs to be done annually. Our Finance Director recommends no changes at this time. The committee discussed FDIC protection and the Finance Director indicated he will look into putting funds into another CD after the first of the year. ***MR. LEVIN MOVED TO NOTE THAT THE FINANCIAL PROCEDURES HAVE BEEN REVIEWED AND THERE ARE NO RECOMMENDED CHANGES AT THIS TIME, GIL SABLACK SUPPORTED THE MOTION; MOTION CARRIED.***

Members were also given a copy of our Cost Allocation Plan that is to be reviewed annually as well. ***BERNIE LANG MOVED TO NOTE THAT THE COST ALLOCATION PLAN HAS BEEN REVIEWED AND THERE ARE NO RECOMMENDED CHANGES AT THIS TIME, MR. SABLACK SECONDED THE MOTION; MOTION CARRIED.***

Mr. Dubord brought up the fact that our Head Start meals have been purchased through our Nutrition Program for many years. This is in part due to the fact that the Nutrition meals already meet most of the nutritional requirements of Head Start. In the past we went out for bids and never received any because it's not feasible for organizations outside of our Nutrition Program to provide what the Head Start Program requires and still make money. Our policies dictate that bidding take place due to the amount being over the $10,000 threshold. ***GIL SABLACK MOVED THAT UNLESS AND UNTIL THE LIMIT CHANGES, WE KEEP THE HEAD START MEALS WITHIN OUR NUTRITION KITCHEN, SECONDED BY BERNIE LANG; MOTION CARRIED.***

Mr. Dubord gave the members a "heads up" that the Head Start Program may end up overspent by $30,000-$60,000 (approximately 1-2% of total grant) this year. We may have to cover the overage out of a combination of corporate and CSBG funds. The committee asked if measurers are being taken to lessen the chances for future over expenditures. The Executive Director and Finance Director indicated that measures are being taken.

The meeting adjourned at 2:00 p.m.

Attachment "B"

SAFETY COMMITTEE MEETING
October 13, 2011
12:45 p.m.

MINUTES

The following were present: Tom Lippens, Marv Mayer, Omer Doran, Walter Multerer, Mari Negro, Kim Johnson, Debby Wiltzius and Pat Johnson.

The Committee reviewed the following two accidents:

1) **(EARLY CHILDHOOD PROGRAM)** A bus monitor jammed her thumb while buckling a child into his car seat. She did seek medical attention and was prescribed an anti-inflammatory medication. She lost a half day of work time. This was simply an unfortunate accident. She should be more aware of the position of her hands when buckling in children. This job can be pretty repetitious and we do things without thinking which can make us accident prone.

2) **(PERSONAL CARE PROGRAM)** The aide had her wheelchair client out for a walk around the block. When returning to her home and pushing the patient up the ramp she must have pulled a muscle in her leg/groin area. She didn't feel any pain until later in the evening when she was trying to sleep. Mari Negro noted that sometimes you don't feel any pain until your muscles are relaxed and warm and this may have been the case. Marv Mayer stated this accident wasn't reported in a timely manner. He had the Safety Policies booklet with him that states an accident should be reported to their supervisor as soon as possible or within 24 hours. This accident was reported after the 24 hour time period. Tom Lippens noted it is extremely hard work pushing a wheelchair up an incline. She did get medical treatment and lost time from work. Marv asked why she didn't get treatment in Menominee because that is where the accident occurred. Debbie explained she spends weekends in Escanaba with her family. This was an unfortunate accident.

Debbie addressed questions that were raised at the last Safety Committee meeting. Personal Care staff are offered both hepatitis and flu shots. Debbie also held a mandatory refresher course in proper procedures for all Personal Care aides.

The meeting adjourned at 1:00 p.m.

Attachment "C"

NOMINATING COMMITTEE MEETING
Tuesday, October 11, 2011
12:00 noon

MINUTES

The following were present: Omer Doran, Dan LaFoille, Tom Lippens, John Stapleton, George Lyon, Dave Anthony, Gil Vandenhouten, Bill Dubord and Cathy Pearson.

Mr. Dubord reviewed the current board vacancies of Helen Walker in the Consumer Sector of Delta County and Ernest Hoholik in the Public Sector of Schoolcraft County.

In addition, it was noted that the following members' board terms expire in the near future: Charmaine Lehman – 12/2011 (Schoolcraft Client Services PAC), Ken Bryant – 1/2012 (Germfask Area Service Club), Rev. Levin – 2/2012 (FGP PAC), Marv Mayer -2/2012 (Menominee Area Kiwanis), Ken Penokie – 2/2012 (Legal Services) & Ruth Helwig – 2/2012 (Delta Co. Client Services PAC).

The Executive Director asked the committee to consider the size of the board as our CSBG pertinent regulations stipulate that the board be tri-partate, with at least one-third consumer sector representation and consist of 15-51 members. He noted that in an informal survey of CAA's throughout the state he found the majority have 18 or less members and the few that have greater than that often cover up to ten counties.

There was discussion on the fact that there would be some cost and time savings associated with a smaller board number. The members expressed concern that no one be forced off, but there may be some members who would volunteer to come off. The members asked how we might tap into more consumer representatives and suggested we think of our service and program focus in the near future when considering new board members. It was also suggested that we re-evaluate the mission of each of our corporations.

MR. LIPPENS MOVED TO BRING THE DISCUSSION OF BOARD SIZE TO THE FULL BOARD AT THE 10/13/2011 GOVERNING BOARD MEETING, DAVE ANTHONY SUPPORTED THE MOTION; MOTION CARRIED.

George Lyon raised the issue of the grievance process and whether a Grievance Committee could be appointed to hear grievances rather than the full board. The members discussed the fact that the last grievance process was cumbersome and confusing for the board, staff and the grievant. The Executive Director suggested that this also be discussed at the 10/13/2011 board meeting as the process is outlined in the Personnel Policies which are on the agenda.

The meeting adjourned at 12:44 p.m.

Menominee-Delta-Schoolcraft
Human Resources Authority

GOVERNING BOARD MEETING

Thursday, October 13, 2011
511 First Ave. N., Escanaba
1:45 p.m. (EDT)

MINUTES

The meeting was called to order 2:52 p.m. by Chair Karen Wigand. A quorum was noted with the following present:

MEMBERS PRESENT

Omer Doran, Schoolcraft
Dan LaFoille, Schoolcraft
George Lyon, Schoolcraft
Mari Negro, Menominee
Walter Multerer, Menominee
Marv Mayer, Menominee
Ken Bryant, Schoolcraft
Myra Croasdell, Delta
Gil Vandenhouten, Menominee
Bernie Lang, Menominee
John Stapleton, Schoolcraft
Karen Wigand, Delta
Dave Rivard, Delta
Beth Pletcher, Menominee
Dave Anthony, Menominee
Ken Penokie, Delta
Brenda Moya, Menominee

MEMBERS ABSENT

Gil Sablack, excused
Geri Nelson, excused
Charmaine Lehman, excused
Pastor Levin, excused
Dave Moyle
Ruth Helwig
George Arkens

OTHERS PRESENT

William Dubord, Executive Director
Cathy Pearson, Executive Assistant
Theresa Nelson, RSVP Director
Beau Miller, Finance Director

Members were mailed the September 8, 2011 Governing Board minutes for their review and ***THEY WERE ACCEPTED WITH A MOTION FROM DAVE RIVARD, SECONDED BY JOHN STAPLETON; MOTION CARRIED.***

FINANCE COMMITTEE REPORT

The Chair called on Treasurer Dan LaFoille who reported that the Finance Committee met on 10/11/2011 and reviewed ***AND RECOMMENDS ACCEPTANCE OF THE HRA AUGUST ACCOUNTS PAYABLE SCHEDULES, SECONDED BY OMER DORAN; MOTION CARRIED.*** The committee also reviewed the HRA September Accounts Payable Schedules ***AND RECOMMENDS THEIR ACCEPTANCE, SUPPORTED BY MR. RIVARD; MOTION CARRIED; 1 – NAY.*** Mr. LaFoille noted that the committee also reviewed the Financial Procedures Manual as is required annually, and recommends no changes at this time. They also reviewed the Cost Allocation Plan as required and recommends no changes to them at this time. Mr. Multerer asked if the summary sheets for the accounts payable schedules could be provided to the members at the board meeting. ***(see attachment "A")***

SAFETY COMMITTEE REPORT

Karen Wigand called on Tom Lippens who reported there was one accident involving a Personnel Care Aide who may have pulled a muscle pushing a client in a wheelchair up an incline. The committee did note that the accident was not reported within 24 hours as it should be. As a follow-up to the July meeting where an employee received a prick from a needle, he told the members that our Personal Care staff are offered both hepatitis and flu shots and refresher training on proper procedures in this type of instance. ***MR. DORAN MOVED TO ACCEPT THE SAFETY COMMITTEE REPORT, GEORGE LYON SUPPORTED THE MOTION; MOTION CARRIED. (see attachment "B")***

NOMINATING COMMITTEE REPORT

The Chair called on George Lyon who reported that the Nominating Committee met on 10/11/2011 to discuss the two vacancies created by the deaths of Helen Walker and Ernie Hoholik. They also noted that several board terms are due to expire in the next several months. Due to these vacancies and reduced funding it was suggested that the size of our board be discussed. Our funding requirements dictate that we have between 15-51 board members. Most CAA's throughout the state have 18 or less and those with 27 or more have a much greater number of counties they operate. There is no requirement to have equal representation by county or sector, the only stipulation that there be ***at least*** one third consumer representation. The committee stressed that they do not wish to force anyone off the board should the board decide to decrease its size. It was suggested that the current board roster, statement of requirements for board composition, average size in the state for CAA's, and the budget/costs to support the board be given to the Nominating Committee for their review. After much discussion Mr. Mayer called the board size issue to question. ***KEN BRYANT MOVED TO REFER THE BOARD COMPOSITION ISSUE BACK TO THE NOMINATING COMMITTEE FOR THEIR REVIEW AND RECOMMENDATION TO THE FULL BOARD, SUPPORTED BY MR. DORAN; MOTION CARRIED. (see attachment "C")***

APPROVAL OF PERSONNEL POLICY FINAL DRAFT

Members were mailed a copy of the proposed Personnel Policy final draft for their review. The Chair called on Mari Negro who suggested that "handicap" be changed to "disability" on page 2 & 3. Mr. LaFoille also suggested that we add a policy on retaining employees for a certain length of time if we pay for any classes for them, or have a payback policy if they leave within the stated timeframe.

Mr. Lyon noted that he thinks the Grievance and Appeals section should be reviewed to consider having grievances heard by a Grievance Committee rather than the full board. There was discussion on the fact that the last grievance process was cumbersome and painful for the grievant, staff and the board. It was noted that even that being said, the process seemed to work. It was suggested that a committee could be comprised of two board members chosen by management, two by the grievant and a third pulled out of a hat.

Mr. Lyon suggested that there be someone trained to guide the termination/grievance process. ***MARI NEGRO MOVED TO CONTINUE THE GRIEVANCE PROCESS AS IT IS, BERNIE LANG SUPPORTED THE MOTION; MOTION CARRIED, 2 – NAY.***

Ms. Wigand called on Brenda Moya who expressed some frustration that management's termination decision wasn't supported, when that's what we've hired them to do and they've studied all the facts. She also suggested that a written vote be taken in grievance decisions, rather than an oral vote. Mr. Penokie noted that whoever is hearing a grievance, it's their job to remain impartial. After much discussion ***MR. LAFOILLE MOVED TO REFER THE POLICIES BACK TO THE PERSONNEL COMMITTEE, SECONDED BY MS. NEGRO; MOTION CARRIED.***

Karen Wigand thanked the members for all of their input.

ACCEPTANCE OF STAFF MONTHLY/YEAR END REPORTS

Members received copies of the staff monthly/year end reports for their review ***AND THEY WERE ACCEPTED WITH A MOTION FROM MARV MAYER, SECONDED BY MR. STAPLETON; MOTION CARRIED.***

ACCEPTANCE OF DHS MONITORING REPORTS FROM 7/18 – 7/19 DATED 9/27/2011 & DOE QUALITY CONTROL LETTER DATED 9/26/2011

Members received a copy of the DOE quality control letter dated 9/26/2011 & the DHS monitoring report dated 9/27/11 and ***THEY WERE ACCEPTED WITH A MOTION FROM MR. RIVARD, SECONDED BY KEN BRYANT; MOTION CARRIED.***

ACCEPTANCE OF POLICY ADVISORY COMMITTEE MINUTES

Members received copies of the following PAC minutes for their review: 9/13 (Menominee/Marinette) & 9/15/11 (Delta) Retired & Senior Volunteer Program and the 8/29 (Schoolcraft) & 9/28/11 (Delta) Senior Companion Program PAC minute. There were no questions or comments ***AND THEY WERE ACCEPTED WITH A MOTION FROM DAN LAFOILLE, SECONDED BY OMER DORAN; MOTION CARRIED.***

FUNDING UPDATE

Ms. Wigand called on Bill Dubord who reported that RSVP federal funds are extended at least through 3/31/12 (they were scheduled to end 2/30/2012. He reported that we are set to receive LIHEAP deliverable fuel funds again of just over $200,000, however, our funders expect us to do asset testing for anyone who receives the funds. We aren't allowed to use any of these funds to pay wages or anything else, and the asset testing will take a great deal more time and hassle for the customer to receive a small amount of money to help them through an emergency. It was noted that at what point do we tell our funding source that it is not feasible for us to administer funds without any support funds, particularly when all other funding is stretched.

Mr. Dubord indicated that our Client Service staff are laid off (which is not unusual this time of year). However, when they are called back it will most likely not be full-time, but part-time seasonal as they work mainly during the heating season. We continue to operate under a Continuing Resolution for our CSBG funds.

EXECUTIVE DIRECTOR'S REPORT

The Chair called on the Executive Director who told the board that the Gladstone remodeling project is finished and it turned out very nice. The Menominee lighting project is complete and the Mid-County Senior Center lighting project has been bid out.

Mr. Dubord announced that we will be holding board training on Friday, December 16th at the Island Resort and Casino on Communication & Roles and Responsibilities in conjunction with our all staff training. The session will run in the morning with lunch to follow. In the afternoon we will have a session on "Striving and Thriving During Difficult Times" for all staff and the board is welcome to attend as well. Our presenter for both sessions is Dr. Lew Bender. More information will be forthcoming. ***MR. BRYANT MOVED TO ACCEPT THE EXECUTIVE DIRECTOR'S REPORT, JOHN STAPLETON SECONDED THE MOTION; MOTION CARRIED.***

OTHER BUSINESS

Ms. Wigand called on Brenda Moya who asked about the fact that baking at the Hermansville Senior Center had to be cut back because they were making too much money. Mr. Dubord will check into this.

Marv Mayer thanked the Foster Grandparent Program for their continued involvement in their "Special Day for Special People"

ADJOURMENT

The meeting adjourned at 3:19 p.m. ***WITH A MOTION FROM GEORGE LYON, SECONDED BY JOHN STAPLETON; MOTION CARRIED.***

THE NEXT MEETING IS SCHEDULED FOR THURSDAY, NOVEMBER 10, 2011.

Attachment "A"

THE FINANCIAL COMMITTEE HAS REVIEWED THE ACCOUNTS PAYABLE SCHEDULES FOR THE MONTH OF AUGUST 2011 FOR THE HUMAN RESOURCES AUTHORITY, INC. WE HAVE DETERMINED THAT THE EXPENDITURES MADE AGAINST THE VARIOUS PROGRAMS ARE REASONABLE AND PROPERLY CHARGED WITHIN BUDGETARY RESTRICTIONS IN THE FOLLOWING AMOUNTS:

SENIOR CITIZENS	$	137,150
VOLUNTEER PROGRAMS		32,495
NUTRITION		121,193
STATE & LOCAL PROGRAMS		77,234
ENERGY AND HOUSING		221,774
ASSET & LIABILITY ACCOUNTS		43,697
TOTAL	$	633,543

SIGNED _____ (TREASURER)

DATE _____

Attachment "A"

THE FINANCIAL COMMITTEE HAS REVIEWED THE ACCOUNTS PAYABLE SCHEDULES FOR THE MONTH OF SEPTEMBER **2011** FOR THE **HUMAN RESOURCES AUTHORITY, INC.** WE HAVE DETERMINED THAT THE EXPENDITURES MADE AGAINST THE VARIOUS PROGRAMS ARE REASONABLE AND PROPERLY CHARGED WITHIN BUDGETARY RESTRICTIONS IN THE FOLLOWING AMOUNTS:

SENIOR CITIZENS	$	187,953
VOLUNTEER PROGRAMS		47,765
NUTRITION		82,152
STATE & LOCAL PROGRAMS		76,104
ENERGY AND HOUSING		246,071
ASSET & LIABILITY ACCOUNTS		70,279
TOTAL	$	710,323

SIGNED _____
(TREASURER)

DATE _____

The Menominee County Board of Road Commissioners held a special meeting in their offices north of Stephenson on Tuesday, October 25, 2011. Chair Betzinger called the meeting to order at 9:00 a.m. with the following persons present or absent:

PRESENT: William Anderson, Roger Betzinger, Anthony Kakuk, Darrell Moilanen and Lisa Savord.

ABSENT: None

The Pledge of Allegiance was recited.

Public comments – None.

Public Appearances – None.

Open/Award bids for Cutting Edges for Moldboard Assemblies – Bids were received and read aloud as follows:

Nortrax, Inc., Escanaba	6' Steel	$ 83.97 each
	7' Steel	$ 97.99 each
	4' Carbide	$222.23 each
	3' Carbide	$166.60 each
Total bid: $40,156.86		
H&L Mesabi, Negaunee	6' Steel	$ 87.70 each
	7' Steel	$102.35 each
	4' Carbide	$261.75 each
	3' Carbide	$195.00 each
Total bid: $43,053.50		
Fabco Equip, Marquette	6' Steel	$ 77.42 each
	7' Steel	$ 89.34 each
	4' Carbide	$179.68 each
	3' Carbide	$134.54 each
Total bid: $35,884.60		
DA MacPherson, Crystal Falls	6' Steel	$ 81.37 each
	7' Steel	$ 94.96 each
	4' Carbide	$215.36 each
	3' Carbide	$161.44 each
Total bid: $38,914.16		
Winter Equip., Willoughby, OH	6' Steel	$115.54 each
	7' Steel	$134.80 each
	4' Carbide	No Bid
	3' Carbide	No Bid
Total bid: $43,328.00		

Moved by Kakuk, seconded by Anderson to award to the low bidder, Fabco Equipment, Marquette, MI. Carried unanimously.

Discuss roadside mowing and existing equipment – Moilanen presented an analysis of the current mowing operation. It was noted that with equipment, repairs, labor & benefits the cost is approximately $80.92 per mile to mow. The following options were discussed: 1. Discontinue mowing. 2. Continue the mowing operation as is with the current equipment. 3. Purchase or lease new or used mowing equipment to replace our outdated equipment. 4. Request bids from private contractors to do the mowing on the county roads, while continuing to use our staff and equipment on the state trunkline. Moved by Kakuk, seconded by Anderson to request the bids from private

contractors after January 1, 2012 to see if that would be more cost efficient. Carried unanimously.

Other business – Betzinger stated that it has been road commission policy that a township would need to have their account paid in full and their share of a project's cost paid before a new project would be started, and that this should be brought to the attention of the Harris Township board prior to starting on the Spring Green Road project.

Betzinger noted that some of the salt spreaders from the Stephenson shop were sitting on the ground over the summer months. Since there is extra room on the spreader racks at Menominee and Powers it was suggested that some of the Stephenson spreaders be stored at the other shops over the summer months. Moilanen stated that when funding is available, a spreader rack for the Stephenson shop should be considered, along with truck cleaning platforms for Stephenson and Powers.

Betzinger asked if the 4% Set-aside balances could be recorded as a credit to the Townships with remaining balances so that the program could be closed out. Savord will discuss this with the auditor. Also discussed was the open AR balances that some of the townships have.

Kakuk asked if the area of US 41 by DDT Construction had been brush chopped yet. Moilanen stated that it had not because MDOT had not yet authorized the work.

Public Comments – None.

There being no further business, Betzinger declared the meeting adjourned at 9:50 a.m.

Road Commission Finance Director-Clerk

Road Commission Chair

The Menominee County Board of Road Commissioners held a regular meeting in their offices north of Stephenson on Tuesday, October 11, 2011.

Chair Betzinger called the meeting to order at 9:00 a.m. with the following persons present or absent:

PRESENT: William Anderson, Roger Betzinger, Anthony Kakuk, Darrell Moilanen and Lisa Savord. Also present were Darlene Nerat, John Nerat, Dale Axtell, Chuck Behrend, Joe Linder and David Wesoloski.

ABSENT: None

Public comments – None.

Public appearances – None.

Additions/corrections to minutes for 09/13/11 and 08/31/11 – There being no additions or corrections, Betzinger declared that the minutes will stand as recorded.

Financial Report -

	Receipts	Expenditures	Payables / Reserves	Balances
Balance, September 12, 2011				$1,235,875.61
Receipts thru 9/30/11	52,892.45			
Expenditures thru 9/30/11		221,069.44		
Balance, September 30, 2011				1,067,698.62
Michigan Transportation Funds	277,325.10			
Receipts thru 10/10/11	54,795.26			
Expenditures thru 10/10/11		173,397.82		
State Maint. & Equip. Advances			76,676.00	
Balance, October 10, 2011	385,012.81	394,467.26	76,676.00	1,149,745.16
Payables & Reserves				
Payroll 10/13, 10/27 (Est.)			130,000.00	
Soc. Sec. 10/13, 10/27 (Est.)			9,945.00	
Reserve for workers compensation insurance			20,029.00	
Reserve for liability insurance			71,766.00	
Reserve for rental grader lease (Dec 2009)			73,871.12	
Reserve for rental grader leases (Oct 2010)			323,179.20	
Reserve 4% set-aside for township allocations (2005/2006)			12,110.91	
Reserve 4% set-aside for township allocations (2006/2007)			38,531.03	
Reserve for MCRC balance of Old US2 over Wilson Creek			24,499.56	
Reserve Hannahville 2% Funds-Town Line Rd to Vincent Ln Pave			0.00	
Reserve for MCRC balance of Town Line Rd to Vincent Ln Pave			0.00	
Reserve Hannahville 2% Funds-County Line Rd. Borings			1,217.76	
Reserve Hannahville 2% Funds-Sign Truck			22,500.00	
Reserve for siding on Menominee shop			8,512.00	
Reserve for 2011 bridge inspections & load ratings			24,852.50	
Reserve for F-4 Lane bridge (Harris Twp)			1,673.07	
Reserve for crack sealing various county roads			0.00	
Reserve for dirt work for pavement patches.			112,345.00	
Reserve for paving of pavement patches			156,630.85	
Reserve for Forest Funds			0.00	
Reserve for driveway plowing			2,362.30	
Reserve for equipment			100,000.00	(1,134,025.30)
				$ 15,719.86

There being no questions or comments, Betzinger declared the financial report accepted as read.

Vouchers # 11-0062, 11-0930, and 12-0001 – Moved by Kakuk, seconded by Anderson that the vouchers be approved and ordered paid. Carried unanimously.

Any other business – Moilanen presented a letter from Michigan Chloride stating they were willing to hold their prices on mineral well brine for an additional year. Moved by Anderson, seconded by Kakuk to accept Michigan Chloride's pricing for 2012. Carried unanimously.

Moilanen stated that the bid spec for blades was ready to be sent out. Moved by Kakuk, seconded by Anderson, to hold a special meeting on Tuesday, October 25, 2011 at 9:00 a.m., to open/award the bid. Carried unanimously.

The annual safety training day will be held on Wednesday, November 2, 2011, from 7:45 a.m. to approximately 2:30 p.m. Moilanen stated that there had been no lost time accidents during the work comp policy year of July 1, 2010 to June 30, 2011. Moved by Anderson, seconded by Kakuk to purchase safety jackets for the employees in honor of this accomplishment. Carried unanimously.

Moilanen asked permission for himself and Savord to attend a meeting in Mt. Pleasant on October 28, 2011 regarding upcoming changes to health insurance with the recently passed legislation. Move by Kakuk, seconded by Anderson to grant permission. Carried unanimously.

Betzinger asked the status of the roadside mowing in the county. Moilanen stated that the crews were nearly finished with the mowing. An analysis of the cost to maintain the mowers will be prepared for the October 25, 2011 special meeting.

Betzinger asked for an update on the remaining 4% funds. Moilanen stated that some of the townships wanted to use the funds for gravelling, but our crews did not have time to do the work before it is too late in the season to put down gravel, so that work would have to be done next year.

Public Comment – David Wesoloski asked if shoulder gravelling would be done yet this year. Moilanen stated that due to the current work load it likely would not be done until next year. Mr. Wesoloski also stated that he had received positive comments from township residents regarding the paving on Birch Creek Road and the brushing that had been done in Menominee Township.

Joe Linder asked about the contract for the gravel in the Kraniak pit. Moilanen stated that the contract would be between Iron City Enterprises and the Kraniaks. Mr. Linder asked how the quantity would be measured. Moilanen stated that Iron City would likely use their belt total, a survey of the gravel pile would also be done and that the road commission would double check the amount as they hauled the gravel.

Dale Axtell asked what the ton to yard conversion was for gravel. Moilanen stated there was 1.5 tons per cubic yard. Mr. Axtell asked if the scale on Iron City's belt was certified. Moilanen replied that he didn't know.

Darlene Nerat asked where the patches were located that had funds reserved in the financial report. Moilanen stated they were on River Road, Oakwood Road, CR551, CR366 and K-1 Road.

Joe Linder asked if Iron City would be paid by their belt weight. Moilanen replied that they would be paid by the survey amount.

Darlene Nerat asked if the dust control brine would be the same as what was used this year. Moilanen stated that it would be. Joe Linder stated that they had tested having a heavier application of the brine put down on approximately one mile of road and that it had held up for around three months, and that the residents were willing to share the cost of the heavier application.

There being no further business, Betzinger declared the meeting adjourned at 9:24a.m.

Road Commission Finance Director/Clerk

Chair